**PRELIMINARY DEVELOPMENT AGREEMENT BETWEEN THE NORTH TEXAS MUNICIPAL WATER DISTRICT AND BD ACQUISITIONS, LLC.**

This Preliminary Development Agreement ("Agreement") is entered into this ____day of September, 2024 (the "Effective Date") by and between North Texas Municipal Water District ("NTMWD"), a wholesale water and wastewater provider that owns and operates Bois d'Arc Lake (the "Lake") in Fannin County, Texas, and BD Acquisitions, LLC ("Developer") seeking to develop approximately 123.79 acres for The Peninsula and Approximately 114.23 acres for The Shores At The Peninsula of property adjacent to the Lake (the "Property") (collectively "Party" or "Parties").

**RECITALS**

WHEREAS, the Parties are authorized to enter into this Agreement pursuant to Chapter 62, Acts of the 52nd Legislature, 1951 (Article 8280-141, Vernon's Texas Civil Statutes) and other applicable laws;

WHEREAS, Developer owns the Property and plans to construct facilities and enter into agreements affecting the Property before the Property is ultimately transferred to The Peninsula & Shores POA (the "Association");

WHEREAS, Developer intends to develop the Property as a master-planned community for residential and recreational use (the "Development");

WHEREAS, Developer plans to transfer the common areas of the Development identified in **Exhibit A** to the Association after the Developer has completed the construction of the improvements and facilities in the Property;

WHEREAS, the Association's covenants, conditions, and restrictions for the Development are attached hereto as **Exhibit A** ("CC&Rs");

WHEREAS, control of the Association will transfer to individual lot owners after the Control Transfer Date as stated in the CC&Rs; and all construction of the improvements and the Project (defined below) has been completed;

WHEREAS, the Development is adjacent to the Lake that is owned and operated by NTMWD;

WHEREAS, NTMWD owns the property below the 541 feet mean sea level ("MSL") of the Lake and owns a Permanent Flowage and Flood Easement (the "Easement") located between the 541 MSL and 545 MSL elevations across the Property (the "Shoreline");

WHEREAS, as part of the Development, Developer seeks to make certain improvements to the Shoreline such as community docks and pathways as described in **Exhibit A** (the "Project");

DRAFT

WHEREAS, before the Project proceeds, Developer must obtain authorization for the Project from NTMWD, as the owner and the Easement holder of the Shoreline; and

WHEREAS, the Parties seek to enter into an agreement to authorize the Project and effect the transfer of the Project to the Association.

THEREFORE, for good and valuable consideration, the receipt and sufficiency of which are hereby acknowledged, including the agreements set forth below, the Parties agree as follows:

**AGREEMENT**

1. **PURPOSE.** The purpose of the Agreement is to establish a preliminary development agreement for Developer to begin construction of the Project contingent upon the Association and Developer subsequently entering into Shoreline Lease and Use Agreement with NTMWD, as further provided herein, and enforcing the CC&Rs.

2. **EFFECTIVE DATE.** This Agreement is effective as of the date first written above.

3. **PROJECT ACTIVITIES.** All Project activities identified in **Exhibit A** may not begin until the following conditions occur: (1) the Developer and its contractors meet with NTMWD to obtain approval to commence work on the Project activities in **Exhibit A**; and (2) NTMWD approves of the Project activities and issues Developer written authorization to work on the Project activities. Any deviation from the Project activities identified in **Exhibit A** require prior written approval by NTMWD after Developer submits a request to NTMWD for a deviation in writing. NTMWD has forty-five (45) days to review any deviation request and respond to the request from Developer. Anything not expressly authorized in writing by NTMWD as a Project activity or an approved deviation from a Project activity is expressly prohibited.

4. **PROJECT ABANDONMENT.** Abandonment of the Project occurs in either of the following situations: (1) failure to maintain the Project within the terms of the Agreement; or (2) failure to comply with Sections 6 and 7 of the Agreement ("Abandonment"). In the event of Abandonment of the Project, Developer shall be required to remove any improvements associated with the Project and restore the Shoreline to the satisfaction of NTMWD within thirty (30) days of receiving written notice from NTMWD requiring removal and restoration. In the event Developer shall fail to remove said improvements associated with the Project and restore the Shoreline, NTMWD shall have the option to take over the improvements without compensation to Developer, or to remove the improvements and perform the restoration at the expense of Developer, and Developer shall have no claim against NTMWD or its officers or agents for such action and no refund by NTMWD of any fee theretofore paid shall be made. Developer shall reimburse NTMWD for any and all costs associated with NTMWD's removal of improvements and restoration within thirty (30) days of NTMWD's request for reimbursement.

5. **DEADLINE FOR COMPLETION.** The deadline for completion of the Project is one year from the latest date of NTMWD's notices to proceed to Developer as provided in

DRAFT

Sections 3 and 4. If the Project is not complete by the one-year deadline, NTMWD has the authority to remove any improvements from the Property and terminate this Agreement effective immediately.

6. **EXTENSION OF DEADLINE FOR COMPLETION.** At NTMWD's sole discretion, the deadline for completion may be extended. For such an extension to be considered, Developer must submit a written extension request to NTMWD at least thirty (30) days before the expiration of the deadline for completion. NTMWD has thirty (30) days to grant or deny Developer's extension request.

7. **DREDGING, EXCAVATION, AND REGRADING ACTIVITIES.** Developer is responsible for notifying NTMWD and obtaining written authorization from NTMWD before every individual dredging, excavation, or regradin project commences on the Shoreline. Any activities are limited to those approved vities included in **Exhibit A**. Notification includes as follows: (1) written ackn wledg ment that Developer has complied with all applicable local, state, and federal laws and reg ations; (2) the estimated start date and end date for the dredging, excava on, or regrading tivity; (3) a point of contact and contact information for every dredging, excavation, or regrading activity; and (4) a description of the specifications and cons uction methods to be employed during the dredging, excavation, or regrading activity. N MWD has the authority to reject any proposed construction methods proposed by Developer for the Project.

8. **ASSOCIATION TO SIGN SHO ELIN EASE AND USE AGREEMENT.** Developer agrees to include the Shoreli e Lease and Use Agreement for the Association's signature during the trans er of ssets, in luding but not limited to the transfer of all real property, personal property, fixt res and y other improvements on the Shoreline, from Developer to the Ass ciation ( e "Transfer"). The Shoreline Lease and Use Agreement is attached as **Exhibit B** which may be revised by NTMWD in its sole discretion. Any revised version f the Shor line Lease and Use Agreement included in **Exhibit B** shall be substantiall similar t the ve ion included in **Exhibit B**. Developer agrees to include a provisio in the agreem nt(s) regarding the Transfer from Developer to the Association that requir the Associa on and the Developer to execute the Shoreline Lease and Use Agreement si ultaneou ly at the time of execution of the agreement(s) regarding the Transfer. Dev ope is solely responsible for paying any fees required under the Bois d'Arc Lake Shoreline Management Plan ("SMP"), including but not limited to application fees for the Shoreline Lease and Use Agreement.

9. **FINANCIAL ASSURANCES.** Developer, at its own expense, shall procure and maintain for the duration of the design and construction phase of the Project, a performance bond in an amount of not less than $1,899,500 for construction of the Project (the "Performance Bond"). The amount covered must be sufficient to cover the entire cost of the Project, and cover the cost needed to remove any Project activities on the Shoreline and restore the Shoreline to its original condition in the event of Abandonment of the Project. Developer must maintain the Performance Bond until all construction of the improvements and the Project has been completed. The Performance Bond shall be on forms reasonably acceptable to NTMWD. The Performance Bond shall be executed by a surety company

DRAFT

authorized to do business in the State of Texas and listed in the current Federal Department of Treasury Circular 570. Developer shall provide evidence of the Performance Bond within ten (10) days following the Effective Date.

10. **OPERATION, MAINTENANCE, REPAIR, & REPLACEMENT.** The operation, maintenance, repair, or replacement of the Project authorized by this Agreement shall be performed at no cost or expense to NTMWD and subject to the express written approval of NTMWD. Anything not expressly authorized in writing by NTMWD as a Project activity or an approved deviation from a Project activity is expressly prohibited. Upon the completion of any of such operation, maintenance, repair, or replacement, Developer shall immediately restore the Shoreline to the satisfaction of NTMWD. The use and occupation of the Shoreline for the purposes herein granted shall be subj ct to NTMWD's property ownership rights, the policies as set forth in the SMP, and t all applicable federal, state, and local laws and regulations. If the Project is rem ed for storage or extensive maintenance, NTMWD may require portions of the Pro ect be r moved from the Shoreline. Further, Developer agrees to operate and maintain the Project an /or use in a manner so as to provide safety, minimize any adverse impact n fish and wildlif habitat, and natural, environmental, or cultural resource values and in a manner so as to minimize the degradation of water quality.

11. **IMPROVEMENT STANDARDS.** Unless otherw e authorized in Sections 3 and 4 of this Agreement, docks and other permitte improvem ts must conform to the standards found in the SMP and **Exhibit A**. The e stan ar address electrical service and lighting, signage, improvement size and length, mp ovement location and spacing, orientation of the improvement to the hore ne, imp ovement maintenance, and other features and amenities as described in the SMP. Any deviation from the SMP requirements will be considered a breach o this Agr em nt

12. **FLOATS AND FLOTAT ON MATERIALS.** Floats and the flotation material for all docks shall e fabrica d of m terials manufactured for marine use and in accordance with the appr ed plans in **Exhibit A**. The float and its flotation material shall be one hundred (100) perc nt warranted for a minimum of eight (8) years against sinking, becoming waterlogged, racking, eeling, fragmenting, or losing beads. All floats shall resist puncture and pe etra on and shall not be subject to damage by animals under normal conditions for the rea. All floats and the flotation material used in them shall be fire resistant. The use of new or recycled plastic or metal drums or non-compartmentalized air containers for encasement or floats is prohibited.

13. **ANCHORING.** The gangways to boat docks, fishing piers, or any other overwater structure shall be securely attached to the shore in accordance with the approved plans by means of moorings that do not create tripping hazards along the shoreline or adversely affect the natural terrain or vegetation. Anchoring to vegetation is prohibited.

14. **AGREEMENT DISPLAY TAG**. The Agreement Display Tag shall be posted at the Project and/or on the land areas covered by the Agreement so that it can be visually checked with ease in accordance with instructions provided by NTMWD.

DRAFT

15. **CONSTRUCTION DISPLAY SIGN.** During the period in which Developer is building roads, docks, and amenities, including site preparation, Developer is required to post a construction display sign from NTMWD. This is required in addition to the required construction notification, and other notifications, permits, and authorizations required by local, state, and federal laws, including but not limited to, obtaining and posting notice of any required construction stormwater general permit.

16. **PROHIBITED ITEMS.** Treated landscape timbers or the storage, transfer, or use of hydrocarbons or other petrochemical products, paint, pesticides, herbicides, or any other toxic or hazardous materials are not allowed on the Shoreline or the Lake.

17. **ELECTRICAL SAFETY AND COMPLIANCE.** Developer shall comply with all applicable federal, state, county, municipal laws, ordinances and regulations wherein the permitted facilities/activities are located, including, but not limited to, the provisions of the latest edition of the National Electrical Code (NEC). Failure to comply with these applicable laws and regulations may be cause for revocation of this Agreement.

18. **POLLUTION PREVENTION.** Within the limits of their respective legal powers, the Parties hereto shall protect the Shoreline against pollution of its air, ground, and water. Developer shall promptly comply with any laws, regulations, conditions, or instructions affecting the activity hereby authorized if and when issued by the Environmental Protection Agency ("EPA"), the United States Army Corps of Engineers ("USACE"), the Texas Commission on Environmental Quality ("TCEQ"), or any federal, state, or local governmental agency having jurisdiction to abate or prevent pollution. The disposal of any toxic or hazardous materials within the Shoreline is strictly prohibited. Such regulations, conditions, or instructions in effect or prescribed by the said EPA, USACE, TCEQ, or any federal, state, or local governmental agency are hereby made a condition of this Agreement. Developer shall not discharge waste or effluent from the Shoreline in such a manner that the discharge will contaminate streams or other bodies of water or otherwise become a public nuisance.

19. **PESTICIDES AND HERBICIDES.** The use of any pesticides or herbicides within the Shoreline and the Lake shall be in conformance with all applicable federal, state, and local laws and regulations. Developer must obtain approval in writing from NTMWD before any pesticides or herbicides are applied to the Shoreline and the Lake.

20. **ENVIRONMENTAL IMPACT.** Developer will use all reasonable means available to protect the environment and natural resources, and where damage nonetheless occurs arising from Developer's activities, Developer shall be required to restore the damaged resources.

21. **TIMBER CLEARING.** Unless expressly authorized under Sections 3 and 4 of this Agreement, no timber above the 534 MSL contour shall be cleared. Standing timber below the 534 MSL contour may be cleared only if approved through this Agreement after Developer submits a timber clearing proposal to NTMWD. Developer shall provide

DRAFT

documentation of coordination with the USACE in accordance with the procedures described in the SMP. Such USACE coordination shall only occur after NTMWD has reviewed the timber clearing proposal and provided direction to engage in such coordination. Any timber clearing authorized under this Agreement must be in compliance with any required USACE approvals, authorizations, or permits. Timber clearing shall be approved by NTMWD in writing and shall be in accordance with the Clean Water Act Section 404 Permit for Bois d'Arc Lake as provided in the SMP. Timber clearing not approved by NTMWD in writing is prohibited and any prohibited timber clearing shall be considered a breach of this Agreement.

22. **AGREEMENT FEES.** Developer shall pay, in advance, to NTMWD, compensation in accordance with **Exhibit C**. Fees are subject to change upon r newal of the Agreement.

23. **DEVELOPER COMPLIANCE WITH LOCAL, STA E, AND FEDERAL LAWS AND REGULATIONS.** It is Developer's sole respon bility r ensuring its performance of this Agreement complies with all local, state, and federal reg lations. NTMWD shall not be responsible for ensuring Developer's com liance with these l ws and regulations.

24. **WAIVER OF ANY TAKINGS CLAIM.** De eloper **WAIVES ANY CLAIM IT MAY NOW OR IN THE FUTURE HAVE AGAINST NTMWD FOR A STATE OR FEDERAL "TAKINGS" or "INVERSE CONDEMNATION"** of either the Project or the portion of the Shoreline on which he Pr ject is loca d resulting from Lake levels being inconstant or from flooding, high water droug t, imilar occurrence, even if any of these occurrences is caused or alleged to be aus d, in whole or in part, by NTMWD, whether through NTMWD's negli ence r otherw se.

25. **INDEMNIFICATION.** NTMWD hall have no liability whatsoever, either to Developer, Developer's successors, as gns, guest invitees or any other third party, for property damage to Dev l er's Proj ct or the contents thereof, caused by inundation or flooding of the proper y or the effect of drought, **EVEN IF CAUSED BY NTMWD'S NEGLIGENCE**. NTMWD shall not be liable to Developer or Developer's contractors, subcontrac rs, guests, vi tors, invitees or to any other person whomsoever, for any injury to person or damage o property on or about the Property due to **ANY CAUSE WHATSOEVE INCLUDING WITHOUT LIMITATION, INUNDATION OR FLOODING OF THE PROPERTY OR THE EFFECTS OF DROUGHT**, and Developer agrees to indemnify NTMWD and hold it harmless from any loss, expenses, or claims including attorney's fees, arising out of any such damage or injury, **INCLUDING INJURY TO PERSON OR DAMAGE TO PROPERTY THE SOLE OR CONTRIBUTING CAUSE OF WHICH IS THE NEGLIGENCE OF NTMWD**. If any action or proceeding is brought against NTMWD by reason of any such claim, Developer, upon notice from NTMWD, will defend such action or proceeding with counsel acceptable to NTMWD.

26. **RELEASE & ASSUMPTION OF RISK.** Developer acknowledges that Bois d'Arc Lake is not a "constant level" or "controlled level" lake and is **SUBJECT TO DROUGHT OR FLOODING WITHOUT WARNING**. Developer acknowledges and agrees that the

DRAFT

Property is being improved upon "**AS-IS, WHERE-IS**," with all defects, whether known or unknown. Developer recognizes the risk inherent in constructing improvements in close proximity to, and over, the Lake because of the risks associated with flooding, high water, and drought conditions. These risks include, but are not limited to, lake level fluctuations resulting in improvements, such as docks, being completely unusable during flood or drought conditions, which can extend over months or years, as it relates to multi-year drought conditions. As a condition of, and in consideration for, NTMWD's entering into this Agreement, as between NTMWD and Developer, Developer **AGREES TO ASSUME ALL RISK** of destruction of or damage to any improvements and the property of Developer or third parties located on the Property and to assume all risk of bodily injury or death to any person on the Property associated with the Project resulting from any cause. As part of the assumption of risk, Developer, for itself and its heirs and assigns, **EXPRESSLY RELEASES NTMWD FROM ALL LOSS COSTS, AND LIABILITY FOR (1) DAMAGE OR DESTRUCTION TO ANY OF TS PROPERTY LOCATED ON OR AT THE PROPERTY RESULTING FROM ANY AUSE AND (2) BODILY INJURY OR DEATH TO DEVELOPER OR ANY CONTRACTOR OR SUBCONTRACTOR OR OTHER PERSON T THE PROPERTY.**

27. **NO GOODS OR SERVICES PROVIDED TO NTMWD.** The Parties agree that pursuant to this Agreement Developer is not prov d ng any "good or services" to NTMWD and this Agreement is not a contract subject to Ch pter 271, Subchapter I of the Texas Local Government Code because no g ds or ser ices," as such terms have been interpreted by courts in the State of Tex s, are p o ded by Developer to NTMWD pursuant to this Agreement.

28. **DAMAGE TO SHORELINE.** evelope shall be liable for any and all damage that may be caused to the Shor ine by th a tivities of Developer, or individual property owners of the Development, under his Agreement and shall exercise due diligence in the protection of all property l ted on he Property against fire or damage from any and all other causes. An property of NTMWD damaged or destroyed by Developer, or individual property owners of the Development, incident to the exercise of the privileges herein granted sh ll be promptl repaired or replaced by Developer or the individual property owner of the Developm nt to a condition satisfactory to NTMWD, or at the election of NTMWD, reimb rsement made therefore by Developer in an amount necessary to restore or replace the prop rty to a condition satisfactory to NTMWD.

29. **NTMWD's ACCESS TO SHORELINE.** The right is reserved to NTMWD, its officers, agents, and employees to enter upon the Shoreline at any time and for any purpose necessary or convenient in connection with NTMWD work, to make inspections, to remove any material, except property of Developer approved for use on the Shoreline, and/or to make any other use of the lands as may be necessary in connection with NTMWD purposes, and Developer shall have no claim for damages on account thereof against NTMWD or any officer, agent, or employee thereof. NTMWD's authorized representative shall be allowed to cross the Property, as necessary, to inspect the Project. NTMWD will notify Developer of any deficiencies noted and will establish a schedule for their correction. No deviation or changes from approved plans for the Project will be allowed without prior

DRAFT

written approval of NTMWD. Any deviations from the Project must be approved in writing by NTMWD after Developer submits a request to NTMWD for a deviation in writing. NTMWD has forty-five (45) days to review and respond to the request from Developer. Notwithstanding the foregoing, if NTMWD determines during an inspection that a noncompliance issue concerns a significant imminent threat to the environment or public health, safety, and general welfare, NTMWD may take whatever action necessary within the authority of NTMWD to eliminate such threat, including but not limited to, requiring Developer to immediately address the noncompliance issue.

30. **LAKE AND SHORELINE ACCESS. A**ll watercraft must be launched from a NTMWD-approved ramp or a dock. This excludes non-motorized watercraft such as kayaks, canoes, and stand up paddle boards. Unless otherwise approved, neither Developer nor individual lot owner may build a boat ramp or use any of their property o launch a watercraft except as set forth herein.

31. **PROPERTY LINE AND SIDE YARD DELINEATION** For this Agreement, Developer will delineate the boundary line b tween NTMWD wned property and Developer's property in a visibly clear, but un trusive manner approved by NTMWD and in accordance with the SMP. Developer will a o iden ify the intersection of the projected side yard line and the 534 MSL as depicted in the xhibit to this Agreement.

32. **SHORELINE MAINTENANCE.** NTMWD is und no obligation to Developer to maintain the Shoreline. Developer is spons l f r maintaining the Shoreline in a clean and sanitary manner, including removin tr sh and other natural debris. Unless expressly authorized by this Agreement, Develope is responsible for acting in accordance with the SMP. Any materials a d refuse om mai tenance and repair activities are to be removed from the Shoreline an the Lak immediately upon completion of such activities.

33. **CULTURAL R SOURCES.** Developer shall not remove or disturb, or cause or permit to be removed or dist bed, a y historical, archaeological, architectural, or other cultural artifacts elics, remains, r objects of antiquity on NTMWD-owned property. In the event such items are discover d on NTMWD-owned property, Developer shall immediately notify NTMWD and pro ect the site and material from further disturbance until NTMWD authorizes any f ther activity.

34. **COMMERCIAL ACTIVITIES PROHIBITED.** No attempt shall be made by Developer to forbid the full and free use by the public of all waters adjacent to the Shoreline. No charge may be made for use by others of the Shoreline or the Lake nor shall commercial activities, including any form of advertising, be conducted thereon.

35. **COMPLIANCE WITH APPLICABLE LAWS AND REGULATIONS.** This Agreement is subject to all applicable federal and state laws and any applicable permits, ordinances, rules, orders, and regulations of any local, state or federal governmental authority having or asserting jurisdiction, including, but not limited to, the provisions of the latest edition of the National Electrical Code (NEC). Nothing contained herein shall be construed as a waiver of any right to question or contest any such law, ordinance, order,

DRAFT

rule, or regulation in any forum, having jurisdiction. This Agreement does not authorize any injury to private property or invasion of private rights or any infringement of local, state or federal laws or regulations, nor does it obviate the necessity of obtaining local, state, or federal assent required by law for the operation, use, maintenance, or repair of the Improvement and/or use.

36. **RULES AND REGULATIONS.** The Property shall be expressly subject to all rules and regulations promulgated by NTMWD for the construction, use, maintenance, and enjoyment of the Property, including without limitation, all regulations and requirements of NTMWD, now or hereafter enacted. By signing this Agreement, Developer specifically acknowledges that it has read the applicable requirements of the Bois d'Arc Lake Rules and Regulations, the SMP, and the Fannin County Zoning Regulations and agrees that Developer's use of the Property shall at all times be in compliance with such plans and regulations.

37. **TERMINATION OF AGREEMENT.** Before NTMWD may terminate the Agreement, NTMWD must send a notification to Developer informing Developer of NTMWD's grounds for termination of the Agreement and giving Developer sixty (60) days to address and cure such grounds for termination. If the time period to cure has passed without Developer taking the required curative action, NTMWD may mail a notice to terminate to Developer by certified letter. The termination of the Agreement is effective as of the date of the termination letter. Unless terminated earlier, the Agreement shall terminate upon the Association's execution of the Shoreline Land Use Agreement.

38. **REMEDIES.** It is not intended hereby to specify (and this Agreement shall not be considered as specifying) an exclusive remedy for any default, but all such other remedies, including termination as provided in Section 39, existing at law or in equity may be availed of by any Party hereto and shall be cumulative.

39. **NOTICE.** Unless otherwise provided herein, any notice, communication, request, reply or advice (herein severally and collectively, for convenience, called "Notice") herein provided or permitted to be given, made or accepted by any Party to any other Party must be in writing and may be given or be served by depositing the same in the United States mail postpaid and registered or certified and addressed to the Party to be notified, with return receipt requested, or by delivering the same to an officer of such Party, or by electronic mail, addressed to the Party to be notified at the email address provided below. Notice deposited in the mail in the manner described above shall be conclusively deemed to be effective, unless otherwise stated herein, from and after the expiration of three (3) days after it is so deposited. Notice given in any other manner shall be effective only if and when received by the Party to be notified. For the purposes of notice, the contact information of the Parties shall, until changed as hereinafter provided, be as follows:

If to Developer, to: BD Acquisitions, LLC.
9827 Cogdill Rd. Suite # 1
Knoxville, TX 37932
912-223-4390
logue@llcinvest.com

DRAFT

If to NTMWD, to: Jennafer P. Covington
Executive Director/General Manager
North Texas Municipal Water District
P.O. Box 2408
Wylie, Texas 75098
972-442-5405
jcovington@ntmwd.com

The Parties hereto shall have the right from time to time and at any time to change their respective contact information and each shall have the ri ht to specify as its contact information any other contact information by at least fift n (15) days' written notice to the other Party hereto.

40. **SEVERABILITY.** In case any one or more of th provisions conta ned in this Agreement shall for any reason be held to be invalid, ill gal, or unenforceable in any respect, such invalidity, illegality, or unenforceability shal not aff t any other provision thereof and this Agreement shall be considered as if such in al d, illegal, or unenforceable provision had never been contained in this Agreement.

41. **NO JOINT VENTURE.** It is acknowl dged a greed by the Parties that the terms hereof are not intended to and shall not be deemed t create any partnership or joint venture among the Parties. NTMWD, its pas present, nd future officers, elected officials, employees and agents of NTMWD do not a sume any responsibilities or liabilities to any third party in connection with th development of the roject or the design, construction or operation of any portion of the Pr ject

42. **REPRESENTATIONS AN WARRANTIES.** Each Party represents and warrants to the other Part that (i) the P ty has ull requisite power and authority to perform its obligations under this greement; (ii the execution, delivery, and performance of this Agreement has been duly au orized by all necessary action of the board of directors or other applicable governing body f the arty; (iii) this Agreement is a valid and binding obligation of the Party enforceable against the Party in accordance with its terms, except as the enforceability may be limited by applicable bankruptcy, insolvency or other law affecting creditors' rights generally, and by general equitable principles; and (iv) the execution, delivery, and performance of this Agreement by the Party does not, and will not: (A) violate the statute, charter, or other instrument pursuant to which the Party was created; (B) violate the Constitution of the State of Texas, or any other law, rule or regulation by which the Party is bound; (C) violate any judgment, writ, order, injunction, award, or decree of any court, arbitrator, administrative agency or other governmental authority which is binding upon the Party; or (D) result in a material breach, violation, or default under any indenture, mortgage, ordinance, bond resolution, contract, deed of trust, debenture, agreement, or other instrument to which the Party is a party.

DRAFT

43. **ENTIRE AGREEMENT – NO ORAL MODIFICATIONS.** This Agreement embodies the entire Agreement of the Parties, superseding all oral or written previous and contemporary agreements between the Parties relating to matters set forth in this Agreement. Except as otherwise provided elsewhere in this Agreement, this Agreement cannot be modified without a written supplemental agreement executed by both Parties.

44. **ASSIGNMENT.** Developer shall not assign this Agreement or any of its rights hereunder without first obtaining the express prior written agreement of NTMWD.

45. **NO THIRD-PARTY BENEFICIARIES.** Developer and NTMWD enter into this Agreement solely for the benefit of themselves and agree that nothing in this Agreement shall be construed to confer any right, privilege or benefit on any person or entity other than Developer and NTMWD.

46. **VENUE.** It is specifically agreed among the Parties to his Ag ement that Fannin County, Texas, is the place of performance of this Agreement; and, in he event that any legal proceeding is brought to enforce this Agreement r any provision he of, the same shall be brought in Fannin County, Texas.

47. **ADOPTION OF PREAMBLE AND EXHIBITS** All of the statements in the preamble and all of the exhibits of this Agreement are true an correct and are hereby incorporated into the body of this Agreement as th ugh lly set for in their entirety herein.

48. **VIOLATIONS AND PENALTIES.** D ve oper will be held accountable to the conditions outlined herein. If a violat on is dentifie NTMWD will follow the steps outlined below:

    *First Notice*: NTMWD will ge er lly issue a written warning notifying Developer of the violation, outlining acti s t correct the violation, and providing a resolution timeframe. Depending on h noncom liance issue (e.g. is the issue an imminent health or safety concern), th time pro ided f resolution and the degree to which NTMWD may step in and proa ively correct n issue may vary. Some violations may immediately generate a fine. NTMWD may, at its discretion, waive fines to be imposed at the first notice. NTMWD will follow up within the pecified timeframe to document resolution of the issue. Increased frequency of mo itoring and inspection may be warranted for a period of time following resolution.

    *Second Notice*: A second notice may involve the same activity or conditions as the first notice, or it may be a new issue. Second notices for the same situation that triggered the first notice will also be linked to increased fines and shorter resolution timeframes. Developer will be required to reimburse NTMWD for costs associated with monitoring, inspection, and follow-up for second notice actions.

    *Third Notice*: Three notices for the same or different instances of noncompliance with this Agreement within one year will trigger a notice to revoke or terminate this Agreement. Developer will have 30 days to remove improvements at its expense and restore the Shoreline to its condition prior to the construction of the improvements (if applicable).

DRAFT

Developer may appeal a notice of termination to NTMWD within 15 days of receiving the notice. NTMWD will respond to Developer within 30 days.

Resolution timeframes and fines are dependent on the harm that may occur to people, property, and resources if the violation were to continue. Violations that are hazardous, or potentially hazardous, generally have shorter resolution timeframes and higher penalties than administrative violations. **Exhibit C** outlines resolution timeframes, remedies, and penalties for various violations.

49. **EFFECTIVE DATE AND TERM**. This Agreement becomes effective as of the Effective Date, set forth above, and unless terminated early as provided herein, will be valid for five (5) years following the Effective Date or until NTMWD enters into a Shoreline Lease and Use with the Association and Developer as provided in Section 9 of this Agreement.

**IN WITNESS WHEREOF,** the Parties hereto acting under authority of their respective governing bodies have caused this Agreement to be duly executed in several counterparts, each of which shall constitute an original.

*[The remainder of this page is intentionally left blank. Signatures are on the following pages.]*

DRAFT

**BD ACQUISTIONS, LLC**

By: _____ _____
Scott Rye, Managing Member Date

STATE OF _____ §
§
COUNTY OF _____ §

This instrument was acknowledged before me on this _____ day of _____, 2024, by Scott Rye, Managing Member of BD Acquisitions, LLC.

_____
Notary Public, State of _____
Printed Name of Notary:

_____
My Commission Expires: _____ _____

[ *igna ures on following page*]

DRAFT

**NORTH TEXAS MUNICIPAL WATER DISTRICT**

By: _____ _____
Jennafer P. Covington, Executive Director/General Manager Date

STATE OF TEXAS §
§
COUNTY OF COLLIN §

This instrument was acknowledged before me on this ____ day of _____, 2024, by Jennafer P. Covington, Executive Director/General Manager North Texas Municipal Water District, a conservation and reclamation district and political s bdivis n of the State of Texas, on behalf of said conservation and reclamation district.

_____
Notary Public, State of Texas
Printed Name of Notary:

_____
My Commission Expires: _____

DRAFT

# EXHIBIT A

Developer Documents

DRAFT

# SHORELINE LEASE AND USE AGREEMENT APPLICATION

**Bois d'Arc Lake, North Texas Municipal Water District (NTMWD)**
**To be submitted through MGO Connect**

## APPLICANT INFORMATION

Date of Application: 9/25/23

E-mail Address: logue@llcinvest.com

Name of Applicant: BD Acquisitions LLC

Address: 9827 Cogdill Rd. Ste 1

Telephone: (912) 223-4390

City, State, Zip Code: Knoxville, TN 37932

## CONTRACTOR INFORMATION

Name of Contractor: JLC Excavation

Address: PO Box 1228

Telephone: (469) 383-4226

City, State, Zip Code: Canton, TX 75169

E-mail Address: johncanada@jlcexcavation.com

## AGREEMENT TYPE (check one)

☒ New

☐ Change in Ownership (Reissue Agreement); please provide agreement number:

☐ Agreement Renewal; please provide agreement number:

## TYPE OF FACILITY (check one or more as appropriate)

*Water-Based*:

☐ Single-Owner Boat Dock

☒ Community Boat Dock

☐ Other/Exception (describe):

*Land-Based:*

☒ Vegetation Modification (including clearing standing timber)

☒ Land-based Recreational Facilities

☐ Access Path

☐ Other/Exception (describe):

## PROJECT DESCRIPTION

Brief description of facility location (include adjacent parcel numbers) and the proposed activity on NTMWD land or easement: Adjacent parcel numbers include 138459, 138460, 138398, 138399, 138,391 - (1) 20 slip dock in The Shores, (1) 20 slip dock in The Peninsula, (1) 8 slip dock in The Peninsula. Golf cart path, dog park, multi-purpose field, playground, firepit

DRAFT

**CONSISTENCY WITH STANDARDS, POLICIES, AND PLANS**

Please explain how the proposed project is consistent with NTMWD standards and policies and with the Bois d'Arc Lake Shoreline Management Plan (SMP).

The project balances the needs of the development, lake access and amenities. While also keeping in mind the needs of the water supply (NTMWD) and water quality.

**PROJECT EXCEPTIONS (*if applicable*)**

Please explain and justify any deviations in the proposed project from NTMWD standards and policies and the Bois d'Arc Lake SMP.

_____

_____

_____

Length of time to complete construction (*if applying for a new agreement*) (maximum of one year allowed): One year

Date of pre-application site inspection (*for new dock construction*): _____

**ALTERNATE POINT OF CONTACT**

The following alternative party will be available on short-notice call and responsible for providing any access to and surveillance of the structure as needed.

Name of Alternate Contact: Brandon Smith Address: 2259 VZ CR 2802 Mabank, TX

Telephone: (903) 340-9380 Email Address: brandon@llcinvest.com

**APPLICATION FEE**

See Fee Table. Application fee submitted to _____

Please note that annual fees may also apply to your Agreement.

**ATTACHMENTS to be included with Agreement Application (see Appendix F for submittal requirements)**

- For all new Agreements:
  - Provide proof of land ownership (e.g. warranty deed, tax assessor notice) that is immediately adjacent to and shares a common boundary with District land. Submit site map, aerial photos, survey plats, or other documents depicting location of private property.

DRAFT

- A copy of the boundary line survey including the seal and signature of a licensed Professional Land Surveyor. The survey should include the boundary line between NTMWD property and the adjacent landowner/applicant along the entire length requested for use plus an additional 100 feet to either side of the requested use footprint or to the property boundary (whichever is shorter).
- A site plan showing the location of the proposed improvements/activities on NTMWD-owned property. The site plan should show the surveyed boundary line and the relative locations of any proposed improvements/activities on NTMWD land as well as any useful landmarks such as an adjacent residence.
- Access paths: include a plan view showing path route and dimensions and materials to be used. Plan should show topography and appropriate erosion control measures proposed.
- Vegetation modification: include a plan view showing the area to be included in the agreement. Describe the existing vegetation including species and type (e.g. trees, shrubs, grasses) to be removed or modified. If planting is proposed, please refer to the native plant list when making selections.

- For applications for new docks, please also attach:
  - One electronic set of structural plans, electrical plans, and specifications for dock facility that have been approved by a structural engineer. Please include all amenities proposed (e.g. storage box, solar battery storage, boat or PWC lift etc.) and provide construction materials and dimensions of facility. Reference to an approved dock plan on file with NTMWD is also acceptable. Please identify any additions or alterations to an approved plan. Structural alterations proposed are required to be stamped by a structural engineer and/or electrician as appropriate.
  - If the adjoining private land is jointly-owned (e.g. Trust, LLC, Non-Profit, etc.), dock applicants must provide documentation indicating their interest in the jointly-owned property.
  - If replacing an existing dock, submit a letter stating the old dock will be dismantled and removed within 30 days of the installation of the new dock.
  - For Community Docks, provide authorized contact and alternates including name, address, and phone numbers.
- For reissuance or renewal of dock agreements only:
  - Electrical Certification (if applicable);
  - Certificate of Compliance or signed statement that all noted deficiencies have been corrected. This signifies the dock meets current inspection criteria.
  - For Community Docks, provide authorized contact and alternates including name, address, and phone numbers.

DRAFT

Please review the conditions that are required of all Shoreline Lease and Use Agreements as found in the SMP. General conditions for Shoreline Lease and Use Agreements are found in Appendix C of the SMP. The general conditions will be applied to all Shoreline Lease and Use Agreements. Additional site-specific conditions may be developed following review of your application.

Note: NTMWD reserves the right to alter this form or to request additional information not specified in this form.

**SIGNATURE**

I hereby designate and authorize the agent/consultant identified above to act on my behalf in processing of this agreement application, and to furnish, upon request, supplemental information in support of this application for shoreline use.

_____ 10/30/2023
(Signature of Applicant/Adjacent Landowner) (Date)

SCOTT RYE 10/30/2023
(Printed Name of Applicant/Adjacent Landowner) (Date)

_____ _____
(Signature of Applicant/Adjacent Landowner) (Date)

_____ _____
(Printed Name of Applicant/Adjacent Landowner) (Date)

I certify that the information provided on this form and all attachments related to this project are true and accurate to the best of my knowledge. I understand that failure to provide true and accurate information may result in the Application being denied or a previously approved Agreement being terminated.

_____ 10/30/23
(Signature of Applicant) (Date)

Brian M Logue 10/30/23
(Printed Name of Applicant) (Date)

DRAFT

| | |
|---|---|
| (Signature of Applicant) | (Date) |
| (Printed Name of Applicant) | (Date) |
| (Signature of Contractor) | 10/25/23 (Date) |
| JOHN CANADA (Printed Name of Contractor) | 10/25/23 (Date) |

DRAFT

September 13, 2024

Ms. Jennifer Montgomery, Director
Lake Operations Manager
North Texas Municipal Water District
4989 FM897
Dodd City, TX 75438

Re: The Peninsula and The Shores at The Peninsula
Development Agreement and Shoreline Lease and Use Agreement

Dear Ms. Montgomery,

The following documents have been submitted to t e North Texas Water District (the "District") by BD Acquisitions, LLC for inclusion with th Development Agreement and Shoreline Lease and Use Agreement to e ex uted bet een BD Acquisitions, LLC and the District for the proposed The Peninsul and The ores at The Peninsula development. All documents bel prepar d by Abbott Consulting & Engineering, LLC, generally conform to the Sho eline Management Plan (SMP) with exceptions noted on the documents and are complete, c rrect and n compliance with the SMP. All documents related to the ac al boat docks, structures, electrical, and solar equipment were prepared and p ided by thers as noted below. The products and materials selected by the Developer, s sho n on the documents prepared by Abbott Consulting & Engineering, LC, are appr priate for the proposed site and application, the proposed size and extent is ufficient a d shall meet the minimum specification requirements in the SMP.

- Shoreline Lease and Use Agreement Application (prepared by BD Acquisitions, LLC)
- Recorded Final Plat for The Peninsula and The Shores at The Peninsula (prepared by Hardin Surveying)
- Declaration of Covenants, Conditions and Restrictions for The Peninsula and The Shores at The Peninsula (prepared by BD Acquisitions, LLC)
- Shoreline Development Agreement Exhibit (prepared by Abbott Consulting and Engineering, LLC) depicting proposed improvements on NTMWD property and the following notes and additional information:
    - General Notes and Construction Notes

DRAFT

- Description of Activity on NTMWD Land
- Notes regarding Consistency with Standards, Policies, and Plans
- Project Exceptions and Justifications

- Community Docks and Shared Docks Plans (prepared by Childers Engineering Services)
- Solar/Electrical Plans (prepared by Flotation Systems, INC)
- Typical Cross-Sections for each Community Dock and Shared Dock (prepared by Flotation Systems, INC)
- Shoreline Stabilization Measures (prepared by Abbott Consulting and Engineering, LLC)

Based on the specifications, the proposed shoreline  abilization system is appropriate for this application and the specifications meet the minimum requirem  nts for revetments in the SMP (unless otherwise noted  The proposed width and limits of the revetment are appropriate in order to meet the req  rements of the site and the SMP.

Sincerely,

Brian C. Abbott, P.E

DRAFT

# CIVIL CONSTRUCTION PLANS

## FOR

# THE PENINSULA & THE SHORES
# AT BOIS D'ARC LAKE
# FANNIN COUNTY, TEXAS

DRAFT

**DEVELOPER**
BD ACQUISITIONS, LLC
9827 COGHILL ROAD, SUITE 1
KNOXVILLE, TN 37932
865.777.1170 PH
MATT LOGUE

**SURVEYOR**
HARDIN SURVEYING
127 E MARKET STREET
MABANK, TX 75147
903.887.5674 PH
JOEY PATRICK, RPLS

**ENGINEER**
ABBOTT CONSULTING &
ENGINEERING, LLC
P.O. BOX 997
CANTON, TEXAS 75103
214.616.0787 PH
BRIAN C. ABBOTT, P.E.

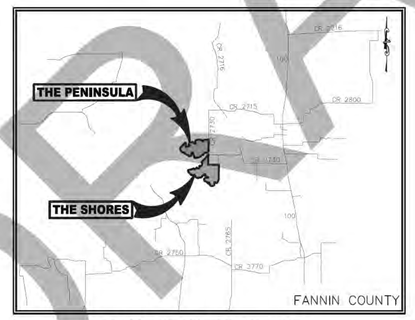


**VICINITY MAP**
(NOT TO SCALE)

## SHEET INDEX


| SHEET NO. | SHEET TITLE |
|---|---|
| C000 | COVER SHEET |
| C001 | THE PENINSULA FINAL PLAT |
| C002 | THE SHORES AT THE PENINSULA FINAL PLAT |
| C003 | THE SHORES AT THE PENINSULA FINAL PLAT |
| C100 | OVERALL SITE PLAN |
| C200 | THE PENINSULA COMMUNITY AREA SITE PLAN |
| C201 | THE PENINSULA BOAT DOCK - LOTS P-16-P-23 |
| C300 | THE SHORES COMMUNITY AREA SITE PLAN |
| C301 | THE SHORES EROSION & SHORELINE STABILIZATION |
| C302 | THE SHORES PLAYGROUND |
| C303 | THE SHORES DOG PARK |
| C304 | THE SHORES TENNIS/PICKLEBALL COURT |
| C305 | THE SHORES CART PARKING, FIRE PIT, AND FLAG POLE |
| C400 | CONSTRUCTION DETAILS |
| C401 | CONSTRUCTION DETAILS |
| C402 | CONSTRUCTION DETAILS |


I HEREBY CERTIFY THAT THESE CIVIL ENGINEERING PLANS HAVE BEEN PREPARED BY ME OR UNDER MY DIRECT SUPERVISION. I FURTHER CERTIFY THAT THE PLANS ARE COMPLETE, ACCURATE, AND IN COMPLIANCE WITH THE BOIS D'ARC LAKE SHORELINE MANAGEMENT PLAN.

STATE OF TEXAS
BRIAN C. ABBOTT
108439
REGISTERED
PROFESSIONAL ENGINEER

09/13/2024

**SEPTEMBER 2024**

Drawing File: 00 CS 23158-03.dwg
Date/Time: Sep 13, 2024 – 4:12pm

ABBOTT CONSULTING & ENGINEERING, LLC
P.O. Box 997
Canton, TX 75103
Brian@Abbott-CE.com
Phone: (214) 616-0787
Texas Firm #: F-21189

THE PENINSULA & THE SHORES – Fannin County, Texas – ACE Project No. 23158-03

THE PENINSULA & THE SHORES AT BOIS D'ARC LAKE
FANNIN COUNTY, TEXAS

COVER SHEET

09/13/2024

| REVISIONS | | |
|---|---|---|
| | DATE | COMMENTS |

SHEET NO.
C000

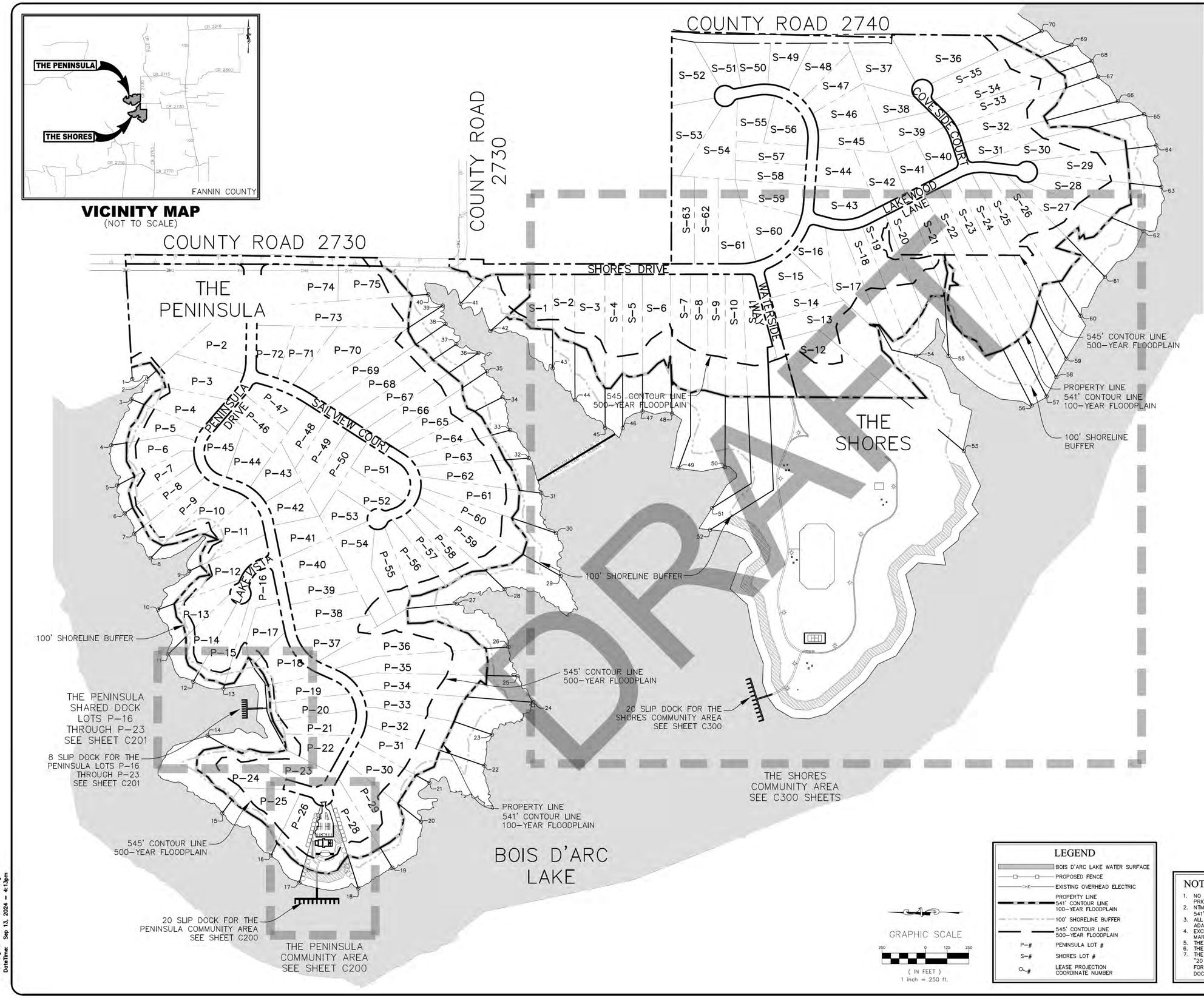


| PROJECTION LINE COORDINATE TABLE | | |
|---|---|---|
| POINT # | NORTHING | EASTING |
| 1 | 7307951.60 | 2744112.05 |
| 2 | 7307864.93 | 2744114.29 |
| 3 | 7307955.47 | 2743994.85 |
| 4 | 7308071.96 | 2743731.11 |
| 5 | 7308038.01 | 2743499.03 |
| 6 | 7307995.10 | 2743338.42 |
| 7 | 7307939.61 | 2743221.91 |
| 8 | 7307845.45 | 2743080.75 |
| 9 | 7307622.59 | 2743006.70 |
| 10 | 7307802.36 | 2742784.11 |
| 11 | 7307744.89 | 2742527.01 |
| 12 | 7307599.49 | 2742368.93 |
| 13 | 7307426.60 | 2742329.54 |
| 14 | 7307518.19 | 2742057.88 |
| 15 | 7307433.08 | 2741611.98 |
| 16 | 7307152.35 | 2741368.12 |
| 17 | 7306989.16 | 2741212.41 |
| 18 | 7306650.41 | 2741178.28 |
| 19 | 7306454.27 | 2741297.76 |
| 20 | 7306289.57 | 2741562.22 |
| 21 | 7306241.01 | 2741786.75 |
| 22 | 7305924.08 | 2741885.25 |
| 23 | 7305880.32 | 2742063.60 |
| 24 | 7305643.38 | 2742250.35 |
| 25 | 7305734.25 | 2742400.35 |
| 26 | 7305785.74 | 2742568.69 |
| 27 | 7306083.49 | 2742817.46 |
| 28 | 7305807.95 | 2742902.93 |
| 29 | 7305484.77 | 2742977.64 |
| 30 | 7305512.12 | 2743225.19 |
| 31 | 7305596.76 | 2743454.91 |
| 32 | 7305669.47 | 2743656.43 |
| 33 | 7305775.84 | 2743817.72 |
| 34 | 7305820.45 | 2744007.28 |
| 35 | 7305909.10 | 2744156.63 |
| 36 | 7305958.17 | 2744262.29 |
| 37 | 7306085.52 | 2744313.24 |
| 38 | 7306147.60 | 2744429.71 |
| 39 | 7306164.47 | 2744534.99 |
| 40 | 7306247.27 | 2744599.51 |
| 41 | 7306061.50 | 2744546.16 |
| 42 | 7305889.78 | 2744389.34 |
| 43 | 7305531.19 | 2744173.42 |
| 44 | 7305402.92 | 2743989.67 |
| 45 | 7305229.21 | 2743830.50 |
| 46 | 7305127.93 | 2743829.15 |
| 47 | 7305013.63 | 2743925.56 |
| 48 | 7304844.25 | 2743913.82 |
| 49 | 7304807.16 | 2743597.48 |
| 50 | 7304539.12 | 2743605.28 |
| 51 | 7304613.72 | 2743368.87 |
| 52 | 7304624.78 | 2743243.79 |
| 53 | 7303163.45 | 2743697.51 |
| 54 | 7303438.99 | 2744246.11 |
| 55 | 7303252.12 | 2744245.05 |
| 56 | 7302773.20 | 2743960.05 |
| 57 | 7302687.70 | 2744012.50 |
| 58 | 7302631.92 | 2744123.20 |
| 59 | 7302574.05 | 2744229.79 |
| 60 | 7302491.95 | 2744476.41 |
| 61 | 7302351.57 | 2744700.54 |
| 62 | 7302130.45 | 2744965.45 |
| 63 | 7302026.90 | 2745219.46 |
| 64 | 7302056.14 | 2745457.67 |
| 65 | 7302126.44 | 2745637.02 |
| 66 | 7302277.77 | 2745711.46 |
| 67 | 7302390.68 | 2745853.60 |
| 68 | 7302427.70 | 2745943.64 |
| 69 | 7302545.01 | 2746036.02 |
| 70 | 7302716.08 | 2746115.93 |

## LEGEND

- BOIS D'ARC LAKE WATER SURFACE
- PROPOSED FENCE
- EXISTING OVERHEAD ELECTRIC
- PROPERTY LINE / 541' CONTOUR LINE / 100-YEAR FLOODPLAIN
- 100' SHORELINE BUFFER
- 545' CONTOUR LINE / 500-YEAR FLOODPLAIN
- P-# PENINSULA LOT #
- S-# SHORES LOT #
- LEASE PROJECTION COORDINATE NUMBER

GRAPHIC SCALE

250 0 125 250

( IN FEET )
1 inch = 250 ft.

## NOTES

1. NO LAND DISTURBING ACTIVITIES ON NTMWD SHALL OCCUR WITHOUT PRIOR WRITTEN AUTHORIZATION FROM NTMWD.
2. NTMWD FLOWAGE EASEMENT CONSISTS OF THAT LAND BETWEEN THE 541' MSL CONTOUR AND 545' MSL CONTOUR.
3. ALL FACILITIES TO BE DESIGNED AND CONSTRUCTED TO CONFORM TO ADA STANDARDS.
4. EXCEPT AS SHOWN ON THESE PLANS, ALL NTMWD BOUNDARY MARKERS SHALL BE PLACED BY THE INDIVIDUAL LOT OWNERS.
5. THE PENINSULA PLAT INSTRUMENT #P2023000017.
6. THE SHORES AT THE PENINSULA PLAT INSTRUMENT #P2023000018.
7. THE ONLY BOAT DOCKS INCLUDED AS PART OF THIS PERMIT ARE THE "20 SLIP DOCK FOR THE PENINSULA COMMON AREA", "8 SLIP DOCK FOR THE PENINSULA LOTS P-16 THROUGH P-23", AND "20 SLIP DOCK FOR THE SHORES COMMON AREA".


ABBOTT CONSULTING & ENGINEERING, LLC
P.O. Box 997
Canton, TX 75103
Brian@Abbott-CE.com
Phone: (214) 616-0787
Texas Firm #: F-21189


THE PENINSULA & THE SHORES AT BOIS D'ARC LAKE

FANNIN COUNTY, TEXAS

THE PENINSULA & THE SHORES – Fannin County, Texas – ACE Project No. 23158-03

# OVERALL SITE PLAN

09/13/2024

| REVISIONS | | | |
|---|---|---|---|
| # | DATE | | COMMENTS |

STATE OF TEXAS
BRIAN C. ABBOTT
108439
REGISTERED PROFESSIONAL ENGINEER

09/13/2024

SHEET NO.
C100

Drawing File: C1 SP 23158-03.dwg
Date/Time: Sep 13, 2024 – 4:13pm

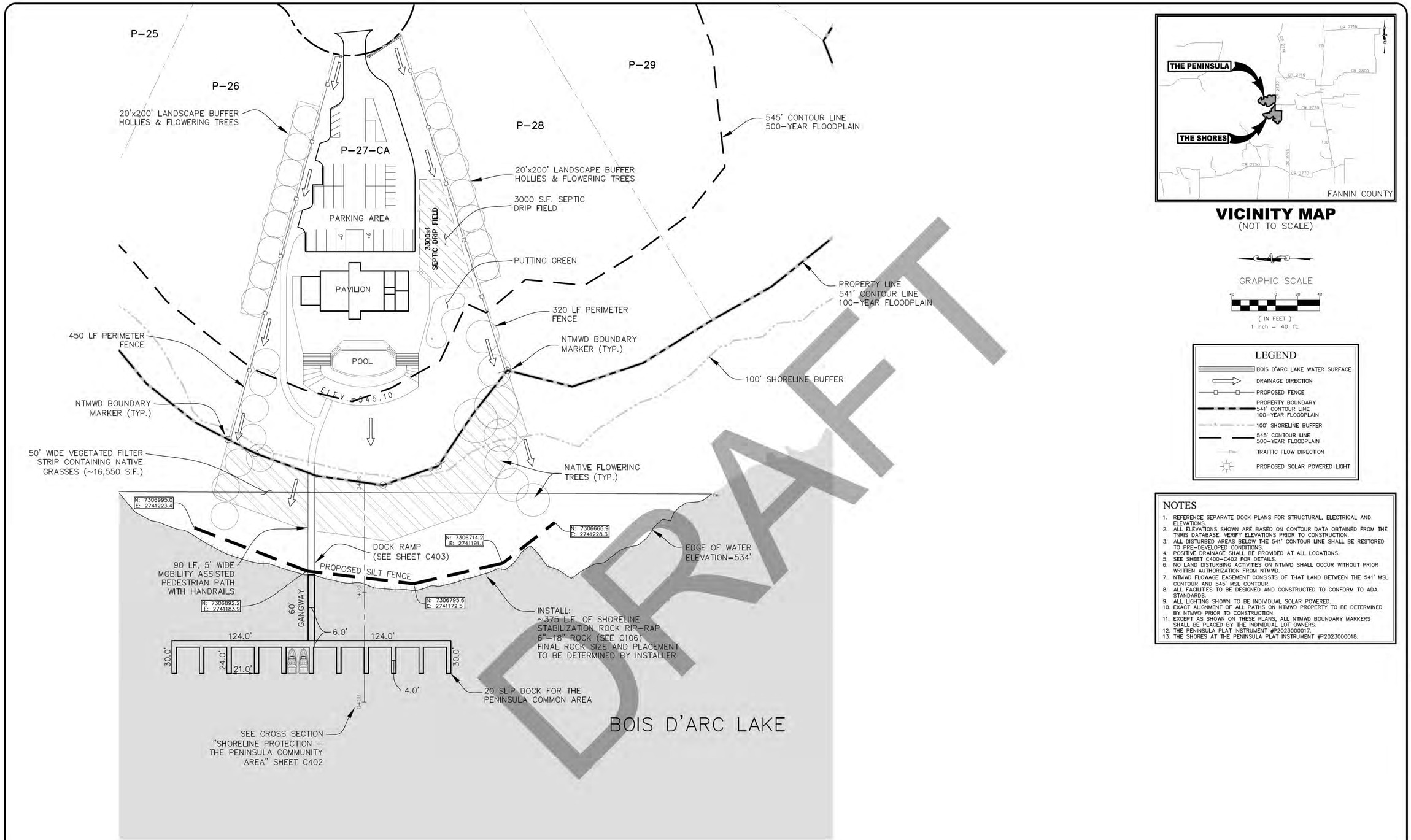





## VICINITY MAP
(NOT TO SCALE)

GRAPHIC SCALE
40 0 20 40
( IN FEET )
1 inch = 40 ft.

### LEGEND

- BOIS D'ARC LAKE WATER SURFACE
- DRAINAGE DIRECTION
- PROPOSED FENCE
- PROPERTY BOUNDARY 541' CONTOUR LINE 100-YEAR FLOODPLAIN
- 100' SHORELINE BUFFER
- 545' CONTOUR LINE 500-YEAR FLOODPLAIN
- TRAFFIC FLOW DIRECTION
- PROPOSED SOLAR POWERED LIGHT

### NOTES

1. REFERENCE SEPARATE DOCK PLANS FOR STRUCTURAL, ELECTRICAL AND ELEVATIONS.
2. ALL ELEVATIONS SHOWN ARE BASED ON CONTOUR DATA OBTAINED FROM THE TNRIS DATABASE. VERIFY ELEVATIONS PRIOR TO CONSTRUCTION.
3. ALL DISTURBED AREAS BELOW THE 541' CONTOUR LINE SHALL BE RESTORED TO PRE-DEVELOPED CONDITIONS.
4. POSITIVE DRAINAGE SHALL BE PROVIDED AT ALL LOCATIONS.
5. SEE SHEET C400-C402 FOR DETAILS.
6. NO LAND DISTURBING ACTIVITIES ON NTMWD SHALL OCCUR WITHOUT PRIOR WRITTEN AUTHORIZATION FROM NTMWD.
7. NTMWD FLOWAGE EASEMENT CONSISTS OF THAT LAND BETWEEN THE 541' MSL CONTOUR AND 545' MSL CONTOUR.
8. ALL FACILITIES TO BE DESIGNED AND CONSTRUCTED TO CONFORM TO ADA STANDARDS.
9. ALL LIGHTING SHOWN TO BE INDIVIDUAL SOLAR POWERED.
10. EXACT ALIGNMENT OF ALL PATHS ON NTMWD PROPERTY TO BE DETERMINED BY NTMWD PRIOR TO CONSTRUCTION.
11. EXCEPT AS SHOWN ON THESE PLANS, ALL NTMWD BOUNDARY MARKERS SHALL BE PLACED BY THE INDIVIDUAL LOT OWNERS.
12. THE PENINSULA PLAT INSTRUMENT #P2023000017.
13. THE SHORES AT THE PENINSULA PLAT INSTRUMENT #P2023000018.


ABBOTT CONSULTING & ENGINEERING, LLC
P.O. Box 997
Canton, TX 75103
Brian@Abbott-CE.com
Phone: (214) 616-0787
Texas Firm #: F-21189


# THE PENINSULA & THE SHORES AT BOIS D'ARC LAKE
FANNIN COUNTY, TEXAS

# THE PENINSULA COMMUNITY AREA SITE PLAN
09/13/2024

THE PENINSULA & THE SHORES – Fannin County, Texas – ACE Project No. 23158-03

| REVISIONS | | |
|---|---|---|
| # | DATE | COMMENTS |

STATE OF TEXAS
BRIAN C. ABBOTT
108439
REGISTERED PROFESSIONAL ENGINEER
09/13/2024

SHEET NO.
C200

Drawing File: C1 SP 23158-03.dwg
DateTime: Sep 13, 2024 – 4:13pm

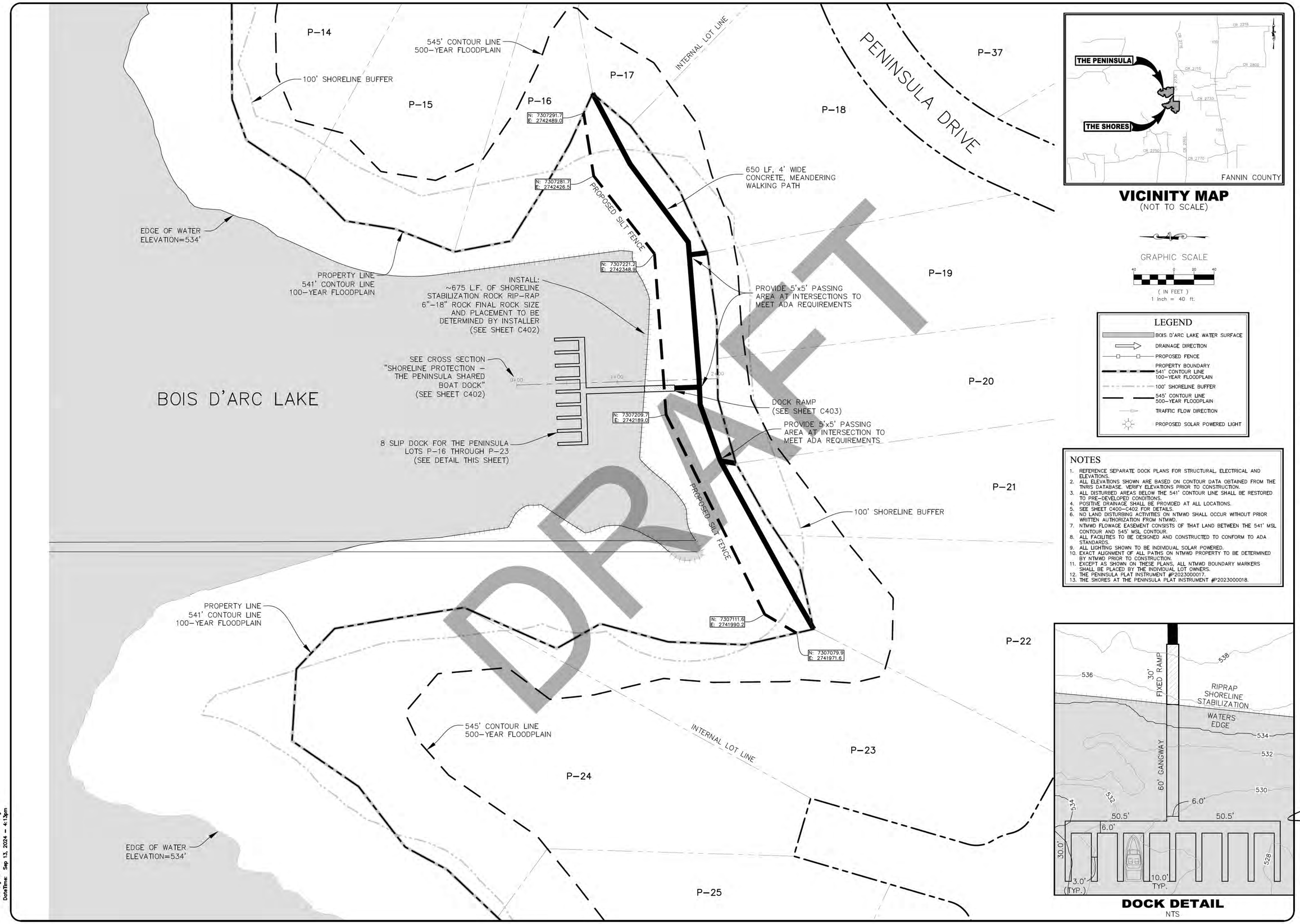





## VICINITY MAP
(NOT TO SCALE)

GRAPHIC SCALE

( IN FEET )
1 inch = 40 ft.

### LEGEND

- BOIS D'ARC LAKE WATER SURFACE
- DRAINAGE DIRECTION
- PROPOSED FENCE
- PROPERTY BOUNDARY / 541' CONTOUR LINE / 100-YEAR FLOODPLAIN
- 100' SHORELINE BUFFER
- 545' CONTOUR LINE / 500-YEAR FLOODPLAIN
- TRAFFIC FLOW DIRECTION
- PROPOSED SOLAR POWERED LIGHT

### NOTES

1. REFERENCE SEPARATE DOCK PLANS FOR STRUCTURAL, ELECTRICAL AND ELEVATIONS.
2. ALL ELEVATIONS SHOWN ARE BASED ON CONTOUR DATA OBTAINED FROM THE TNRIS DATABASE. VERIFY ELEVATIONS PRIOR TO CONSTRUCTION.
3. ALL DISTURBED AREAS BELOW THE 541' CONTOUR LINE SHALL BE RESTORED TO PRE-DEVELOPED CONDITIONS.
4. POSITIVE DRAINAGE SHALL BE PROVIDED AT ALL LOCATIONS.
5. SEE SHEET C400-C402 FOR DETAILS.
6. NO LAND DISTURBING ACTIVITIES ON NTMWD SHALL OCCUR WITHOUT PRIOR WRITTEN AUTHORIZATION FROM NTMWD.
7. NTMWD FLOWAGE EASEMENT CONSISTS OF THAT LAND BETWEEN THE 541' MSL CONTOUR AND 545' MSL CONTOUR.
8. ALL FACILITIES TO BE DESIGNED AND CONSTRUCTED TO CONFORM TO ADA STANDARDS.
9. ALL LIGHTING SHOWN TO BE INDIVIDUAL SOLAR POWERED.
10. EXACT ALIGNMENT OF ALL PATHS ON NTMWD PROPERTY TO BE DETERMINED BY NTMWD PRIOR TO CONSTRUCTION.
11. EXCEPT AS SHOWN ON THESE PLANS, ALL NTMWD BOUNDARY MARKERS SHALL BE PLACED BY THE INDIVIDUAL LOT OWNERS.
12. THE PENINSULA PLAT INSTRUMENT #P2023000017.
13. THE SHORES AT THE PENINSULA PLAT INSTRUMENT #P2023000018.




## DOCK DETAIL
NTS


ABBOTT CONSULTING & ENGINEERING, LLC
P.O. Box 997
Canton, TX 75103
Brian@Abbott-CE.com
Phone: (214) 616-0787
Texas Firm #: F-21189


THE PENINSULA & THE SHORES AT BOIS D'ARC LAKE
FANNIN COUNTY, TEXAS

THE PENINSULA BOAT DOCK
LOTS P-16 THROUGH P-23

09/13/2024

| REVISIONS | | |
|---|---|---|
| # | DATE | COMMENTS |

STATE OF TEXAS
BRIAN C. ABBOTT
108439
REGISTERED PROFESSIONAL ENGINEER
09/13/2024

SHEET NO.
C201

THE PENINSULA & THE SHORES – Fannin County, Texas – ACE Project No. 23158-03

Drawing File: C1 SP 23158-03.dwg
Date/Time: Sep 13, 2024 – 4:13pm

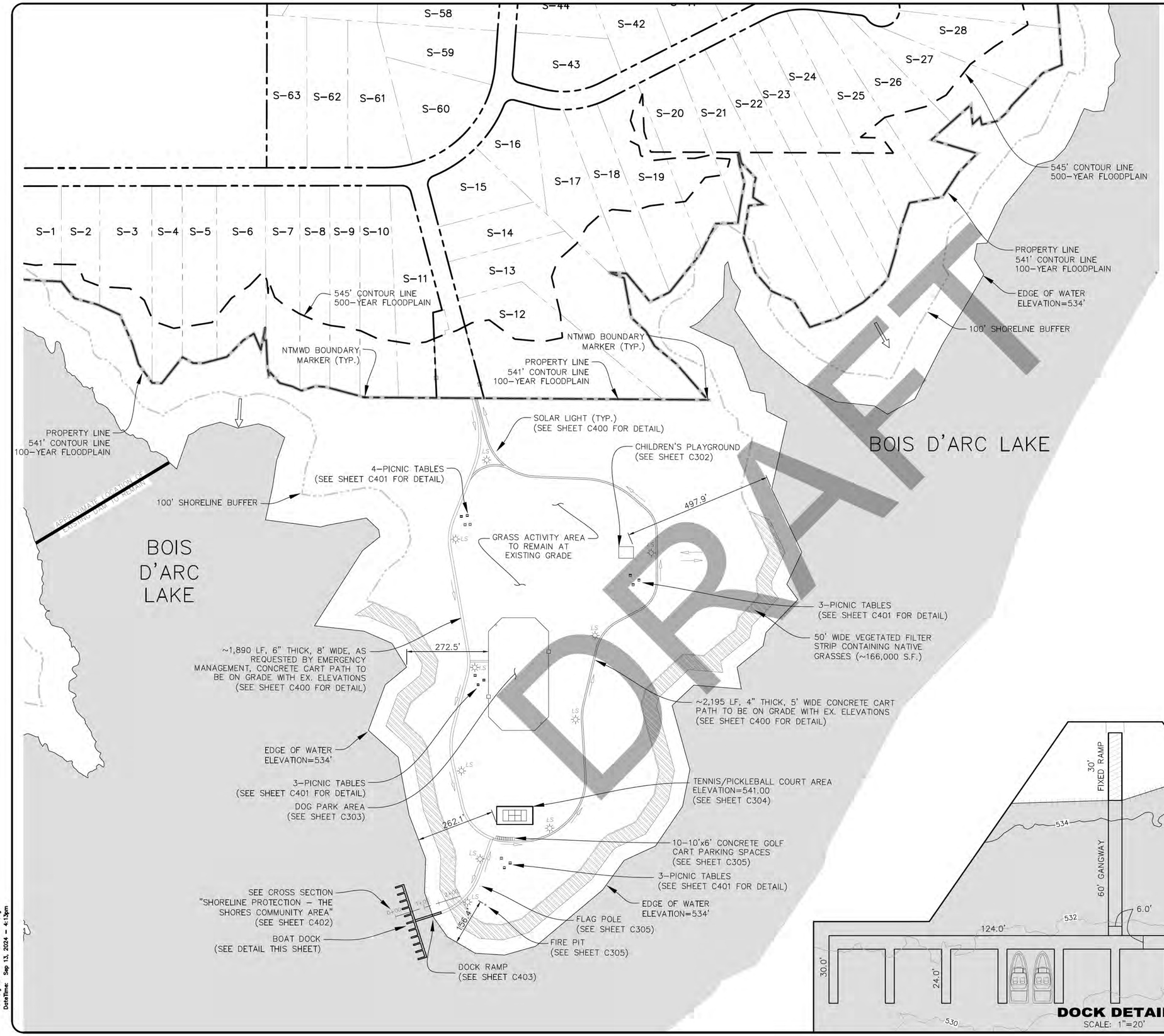


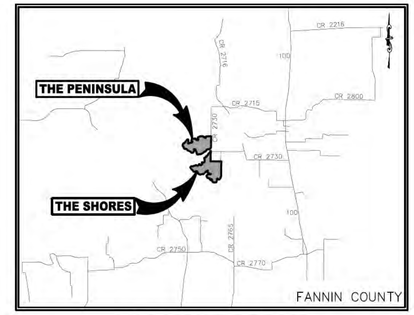


## VICINITY MAP
(NOT TO SCALE)

GRAPHIC SCALE

150 0 75 150

( IN FEET )
1 inch = 150 ft.

### LEGEND

- BOIS D'ARC LAKE WATER SURFACE
- DRAINAGE DIRECTION
- PROPOSED FENCE
- PROPERTY BOUNDARY / 541' CONTOUR LINE / 100-YEAR FLOODPLAIN
- 100' SHORELINE BUFFER
- 545' CONTOUR LINE / 500-YEAR FLOODPLAIN
- TRAFFIC FLOW DIRECTION
- PROPOSED SOLAR POWERED LIGHT

### NOTES

1. REFERENCE SEPARATE DOCK PLANS FOR STRUCTURAL, ELECTRICAL AND ELEVATIONS.
2. ALL ELEVATIONS SHOWN ARE BASED ON CONTOUR DATA OBTAINED FROM THE TNRIS DATABASE. VERIFY ELEVATIONS PRIOR TO CONSTRUCTION.
3. ALL DISTURBED AREAS BELOW THE 541' CONTOUR LINE SHALL BE RESTORED TO PRE-DEVELOPED CONDITIONS.
4. POSITIVE DRAINAGE SHALL BE PROVIDED AT ALL LOCATIONS.
5. SEE SHEET C400-C402 FOR DETAILS.
6. NO LAND DISTURBING ACTIVITIES ON NTMWD SHALL OCCUR WITHOUT PRIOR WRITTEN AUTHORIZATION FROM NTMWD.
7. NTMWD FLOWAGE EASEMENT CONSISTS OF THAT LAND BETWEEN THE 541' MSL CONTOUR AND 545' MSL CONTOUR.
8. ALL FACILITIES TO BE DESIGNED AND CONSTRUCTED TO CONFORM TO ADA STANDARDS.
9. ALL LIGHTING SHOWN TO BE INDIVIDUAL SOLAR POWERED.
10. EXACT ALIGNMENT OF ALL PATHS ON NTMWD PROPERTY TO BE DETERMINED BY NTMWD PRIOR TO CONSTRUCTION.
11. EXCEPT AS SHOWN ON THESE PLANS, ALL NTMWD BOUNDARY MARKERS SHALL BE PLACED BY THE INDIVIDUAL LOT OWNERS.
12. THE PENINSULA PLAT INSTRUMENT #2023000017.
13. THE SHORES AT THE PENINSULA PLAT INSTRUMENT #2023000018.
14. A SIGNAGE PLAN WILL WILL BE REQUIRED PRIOR TO CONSTRUCTION.

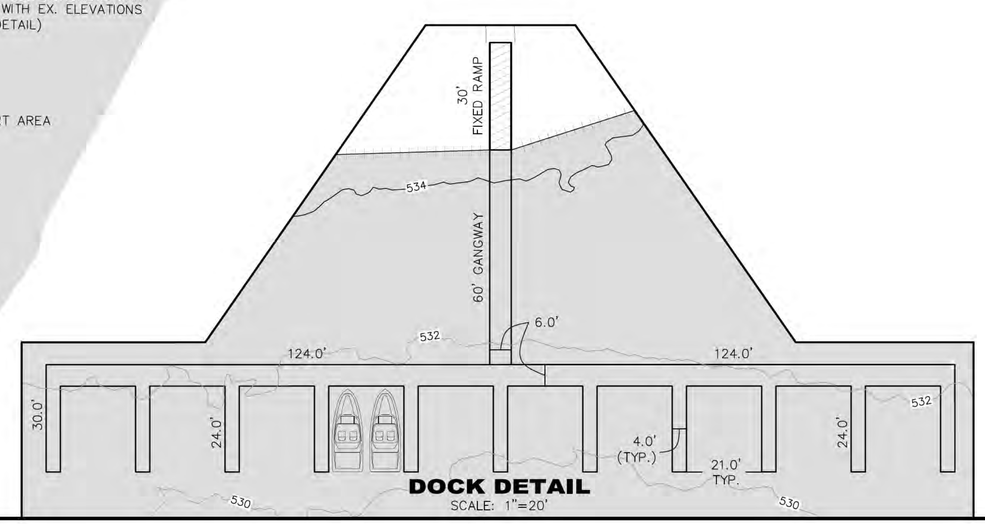


## DOCK DETAIL
SCALE: 1"=20'


ABBOTT CONSULTING & ENGINEERING, LLC
P.O. Box 997
Canton, TX 75103
Brian@Abbott-CE.com
Phone: (214) 616-0787
Texas Firm #: F-21189


# THE PENINSULA & THE SHORES AT BOIS D'ARC LAKE
FANNIN COUNTY, TEXAS

# THE SHORES COMMUNITY AREA SITE PLAN

09/13/2024

| REVISIONS | | | | | | | | COMMENTS |
|---|---|---|---|---|---|---|---|---|
| | | | | | | | | |
| | | | | | | | | |
| | | | | | | | | |
| | | | | | | | | |
| | | | | | | | | |
| | | | | | | | | |
| | | | | | | | | |
| | | | | | | | | |
| | | | | | | | | DATE |

STATE OF TEXAS
BRIAN C. ABBOTT
108439
REGISTERED PROFESSIONAL ENGINEER
09/13/2024

SHEET NO.
C300

THE PENINSULA & THE SHORES - Fannin County, Texas - ACE Project No. 23158-03

Drawing File: C1 SP 23158-03.dwg
DateTime: Sep 13, 2024 - 4:13pm

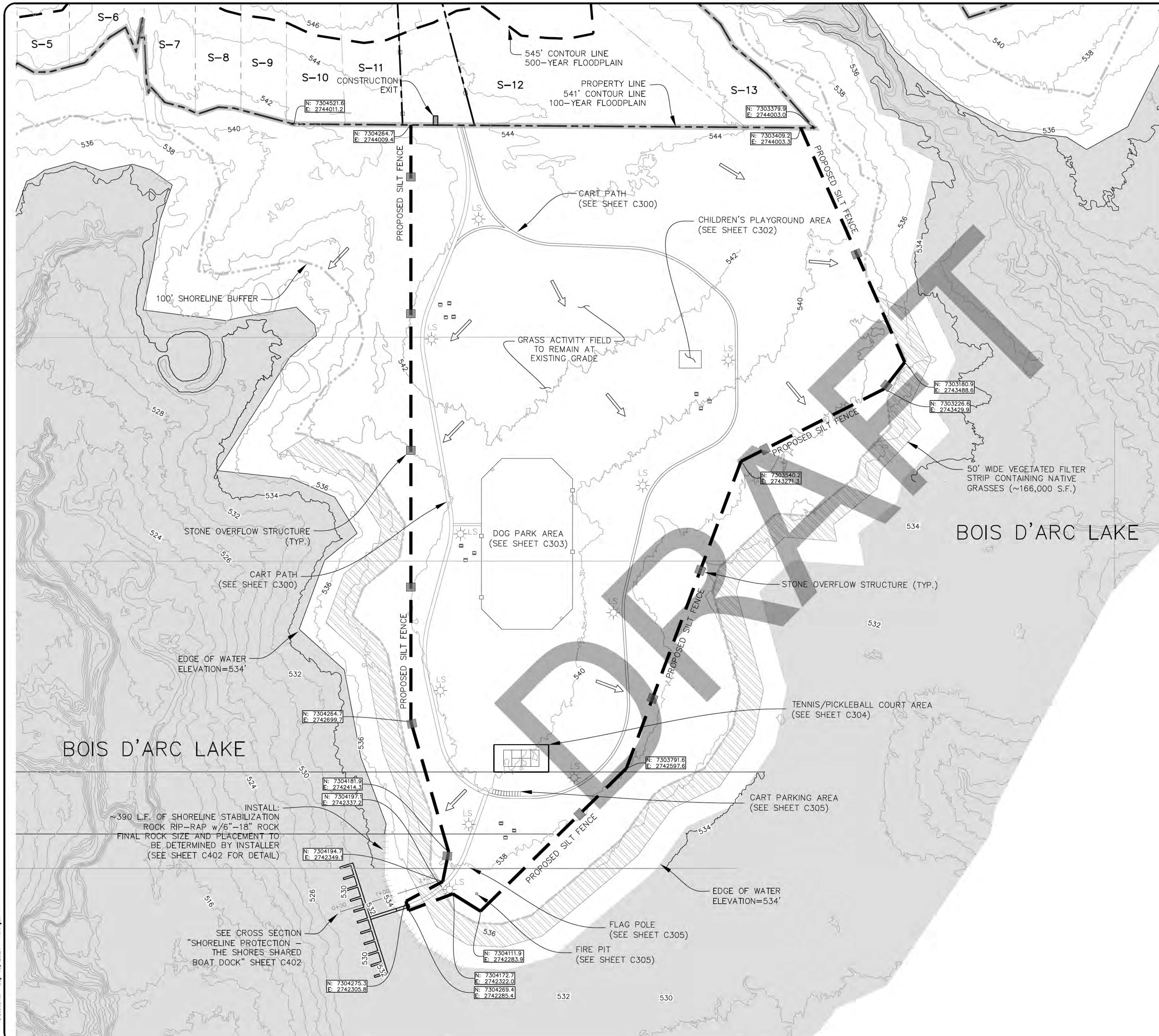


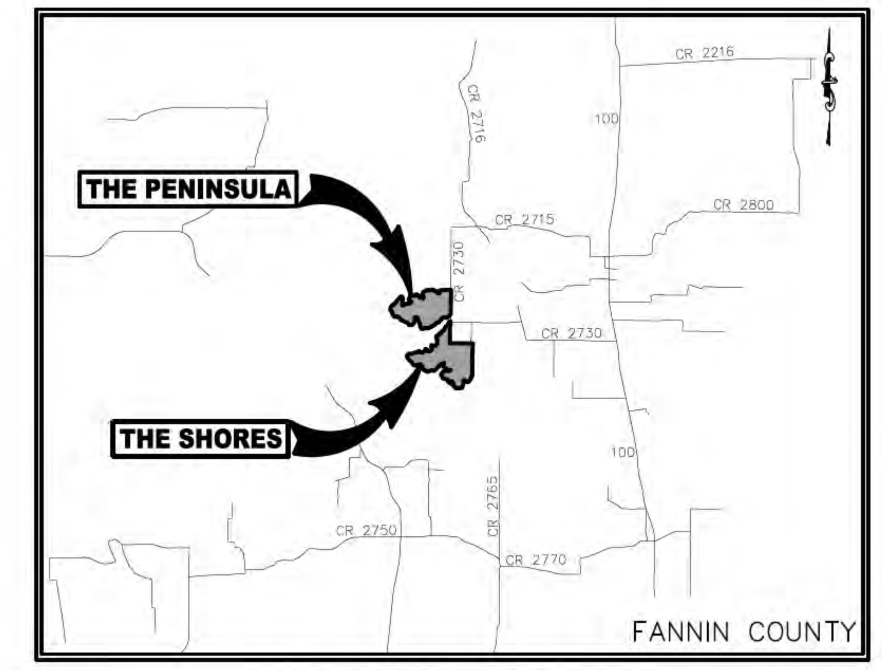


## VICINITY MAP
(NOT TO SCALE)

GRAPHIC SCALE

( IN FEET )
1 inch = 100 ft.

## LEGEND

- BOIS D'ARC LAKE WATER SURFACE
- DRAINAGE DIRECTION
- PROPOSED FENCE
- PROPERTY BOUNDARY / 541' CONTOUR LINE / 100-YEAR FLOODPLAIN
- 100' SHORELINE BUFFER
- 545' CONTOUR LINE / 500-YEAR FLOODPLAIN
- SILT FENCE
- LS PROPOSED SOLAR POWERED LIGHT (SEE SHEET C400 FOR DETAIL)

## NOTES

1. REFERENCE SEPARATE DOCK PLANS FOR STRUCTURAL, ELECTRICAL AND ELEVATIONS.
2. ALL ELEVATIONS SHOWN ARE BASED ON CONTOUR DATA OBTAINED FROM THE TNRIS DATABASE. VERIFY ELEVATIONS PRIOR TO CONSTRUCTION.
3. ALL DISTURBED AREAS BELOW THE 541' CONTOUR LINE SHALL BE RESTORED TO PRE-DEVELOPED CONDITIONS.
4. POSITIVE DRAINAGE SHALL BE PROVIDED AT ALL LOCATIONS.
5. SEE SHEET C400-C402 FOR DETAILS.
6. NO LAND DISTURBING ACTIVITIES ON NTMWD SHALL OCCUR WITHOUT PRIOR WRITTEN AUTHORIZATION FROM NTMWD.
7. NTMWD FLOWAGE EASEMENT CONSISTS OF THAT LAND BETWEEN THE 541' MSL CONTOUR AND 545' MSL CONTOUR.
8. ALL FACILITIES TO BE DESIGNED AND CONSTRUCTED TO CONFORM TO ADA STANDARDS.
9. ALL LIGHTING SHOWN TO BE INDIVIDUAL SOLAR POWERED.
10. EXACT ALIGNMENT OF ALL PATHS ON NTMWD PROPERTY TO BE DETERMINED BY NTMWD PRIOR TO CONSTRUCTION.
11. EXCEPT AS SHOWN ON THESE PLANS, ALL NTMWD BOUNDARY MARKERS SHALL BE PLACED BY THE INDIVIDUAL LOT OWNERS.
12. THE PENINSULA PLAT INSTRUMENT #P2023000017.
13. THE SHORES AT THE PENINSULA PLAT INSTRUMENT #P2023000018.
14. CONTOURS SHOWN ARE FROM THE TEXAS NATURAL RESOURCES INFORMATION SYSTEM (TNRIS) DATAHUB DATED 04/21/2021.

ABBOTT CONSULTING & ENGINEERING, LLC
P.O. Box 997
Canton, TX 75103
Brian@Abbott-CE.com
Phone: (214) 616-0787
Texas Firm #: F-21189

THE PENINSULA & THE SHORES - Fannin County, Texas - ACE Project No. 23158-03

# THE PENINSULA & THE SHORES AT BOIS D'ARC LAKE

FANNIN COUNTY, TEXAS

# THE SHORES EROSION AND SHORELINE STABILIZATION

09/13/2024

| # | DATE | REVISIONS COMMENTS |
|---|---|---|
| | | |

STATE OF TEXAS
BRIAN C. ABBOTT
108439
REGISTERED PROFESSIONAL ENGINEER
09/13/2024

SHEET NO.
C301

Drawing File: C1 SP 23158-03.dwg
DateTime: Sep 13, 2024 - 4:14pm

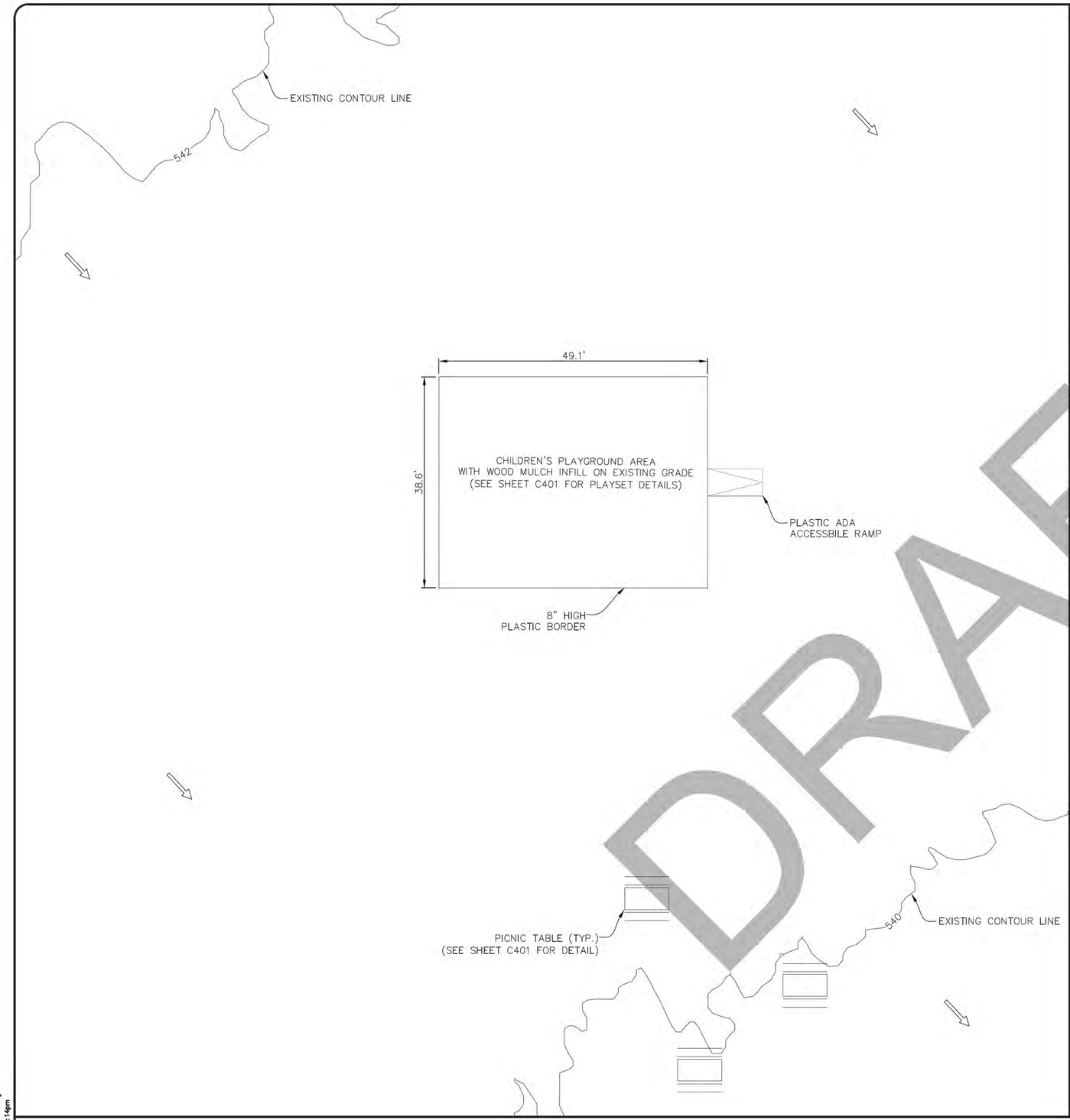


DRAFT

GRAPHIC SCALE

100 0 50 100

( IN FEET )
1 inch = 100 ft.

## LEGEND

DRAINAGE DIRECTION

## NOTES

1. REFERENCE SEPARATE DOCK PLANS FOR STRUCTURAL, ELECTRICAL AND ELEVATIONS.
2. ALL ELEVATIONS SHOWN ARE BASED ON CONTOUR DATA OBTAINED FROM THE TNRIS DATABASE. VERIFY ELEVATIONS PRIOR TO CONSTRUCTION.
3. ALL DISTURBED AREAS BELOW THE 541' CONTOUR LINE SHALL BE RESTORED TO PRE-DEVELOPED CONDITIONS.
4. POSITIVE DRAINAGE SHALL BE PROVIDED AT ALL LOCATIONS.
5. SEE SHEET C400-C402 FOR DETAILS.
6. NO LAND DISTURBING ACTIVITIES ON NTMWD SHALL OCCUR WITHOUT PRIOR WRITTEN AUTHORIZATION FROM NTMWD.
7. NTMWD FLOWAGE EASEMENT CONSISTS OF THAT LAND BETWEEN THE 541' MSL CONTOUR AND 545' MSL CONTOUR.
8. ALL FACILITIES TO BE DESIGNED AND CONSTRUCTED TO CONFORM TO ADA STANDARDS.
9. ALL LIGHTING SHOWN TO BE INDIVIDUAL SOLAR POWERED.
10. EXACT ALIGNMENT OF ALL PATHS ON NTMWD PROPERTY TO BE DETERMINED BY NTMWD PRIOR TO CONSTRUCTION.
11. EXCEPT AS SHOWN ON THESE PLANS, ALL NTMWD BOUNDARY MARKERS SHALL BE PLACED BY THE INDIVIDUAL LOT OWNERS.
12. THE PENINSULA PLAT INSTRUMENT #P2023000017.
13. THE SHORES AT THE PENINSULA PLAT INSTRUMENT #P2023000018.
14. CONTOURS SHOWN ARE FROM THE TEXAS NATURAL RESOURCES INFORMATION SYSTEM (TNRIS) DATAHUB DATED 04/21/2021.

ABBOTT CONSULTING & ENGINEERING, LLC
P.O. Box 997
Canton, TX 75103
Brian@Abbott-CE.com
Phone: (214) 616-0787
Texas Firm #: F-21189

THE PENINSULA & THE SHORES AT BOIS D'ARC LAKE
FANNIN COUNTY, TEXAS

THE SHORES
CHILDREN'S PLAYGROUND

09/13/2024

| REVISIONS | | |
|---|---|---|
| # | DATE | COMMENTS |

BRIAN C. ABBOTT
108439
REGISTERED
PROFESSIONAL ENGINEER
09/13/2024

SHEET NO.
C302

THE PENINSULA & THE SHORES – Fannin County, Texas – ACE Project No. 23158-03

Drawing File: C1.5 GAD 23158-03.dwg
Date/Time: Sep 13, 2024 – 4:14pm

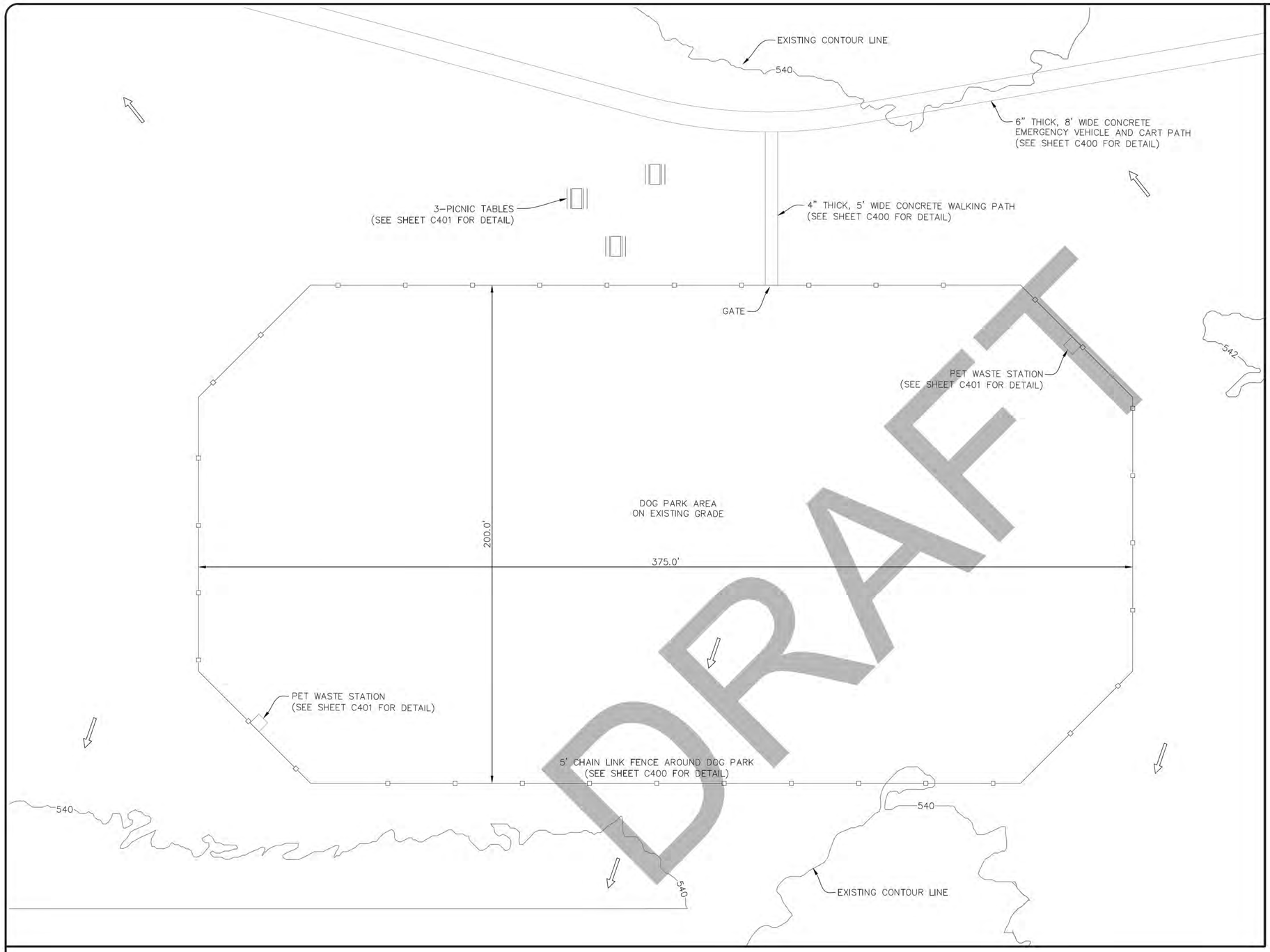


GRAPHIC SCALE

20 10 0 10 20

( IN FEET )
1 inch = 20 ft.

**LEGEND**

DRAINAGE DIRECTION

## NOTES

1. REFERENCE SEPARATE DOCK PLANS FOR STRUCTURAL, ELECTRICAL AND ELEVATIONS.
2. ALL ELEVATIONS SHOWN ARE BASED ON CONTOUR DATA OBTAINED FROM THE TNRIS DATABASE. VERIFY ELEVATIONS PRIOR TO CONSTRUCTION.
3. ALL DISTURBED AREAS BELOW THE 541' CONTOUR LINE SHALL BE RESTORED TO PRE-DEVELOPED CONDITIONS.
4. POSITIVE DRAINAGE SHALL BE PROVIDED AT ALL LOCATIONS.
5. SEE SHEET C400-C402 FOR DETAILS.
6. NO LAND DISTURBING ACTIVITIES ON NTMWD SHALL OCCUR WITHOUT PRIOR WRITTEN AUTHORIZATION FROM NTMWD.
7. NTMWD FLOWAGE EASEMENT CONSISTS OF THAT LAND BETWEEN THE 541' MSL CONTOUR AND 545' MSL CONTOUR.
8. ALL FACILITIES TO BE DESIGNED AND CONSTRUCTED TO CONFORM TO ADA STANDARDS.
9. ALL LIGHTING SHOWN TO BE INDIVIDUAL SOLAR POWERED.
10. EXACT ALIGNMENT OF ALL PATHS ON NTMWD PROPERTY TO BE DETERMINED BY NTMWD PRIOR TO CONSTRUCTION.
11. EXCEPT AS SHOWN ON THESE PLANS, ALL NTMWD BOUNDARY MARKERS SHALL BE PLACED BY THE INDIVIDUAL LOT OWNERS.
12. THE PENINSULA PLAT INSTRUMENT #P2023000017.
13. THE SHORES AT THE PENINSULA PLAT INSTRUMENT #P2023000018.
14. CONTOURS SHOWN ARE FROM THE TEXAS NATURAL RESOURCES INFORMATION SYSTEM (TNRIS) DATAHUB DATED 04/21/2021.


**ABBOTT CONSULTING & ENGINEERING, LLC**

P.O. Box 997
Canton, TX 75103
Brian@Abbott-CE.com

Phone: (214) 616-0787
Texas Firm #: F-21189


# THE PENINSULA & THE SHORES AT BOIS D'ARC LAKE

FANNIN COUNTY, TEXAS

## THE SHORES DOG PARK

09/13/2024

| REVISIONS | | | |
|---|---|---|---|
| # | DATE | COMMENTS | |
| | | | |

STATE OF TEXAS
BRIAN C. ABBOTT
108439
REGISTERED PROFESSIONAL ENGINEER

09/13/2024

SHEET NO.
C303

THE PENINSULA & THE SHORES – Fannin County, Texas – ACE Project No. 23158-03

Drawing File: C1.5 G&D 23158-03.dwg
DateTime: Sep 13, 2024 – 4:14pm

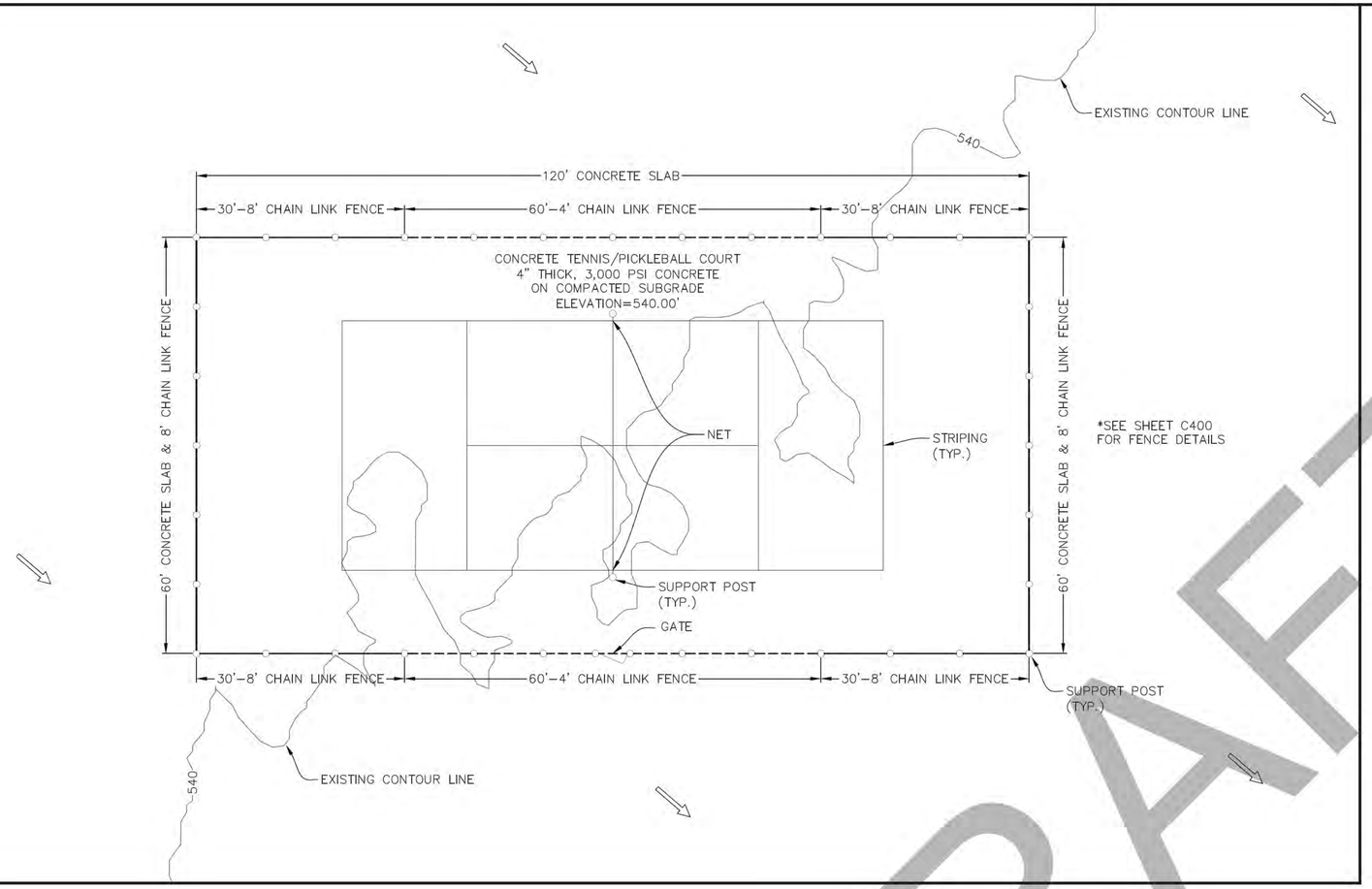


GRAPHIC SCALE

10 0 5 10

( IN FEET )
1 inch = 10 ft.

**LEGEND**

DRAINAGE DIRECTION

## NOTES

1. REFERENCE SEPARATE DOCK PLANS FOR STRUCTURAL, ELECTRICAL AND ELEVATIONS.
2. ALL ELEVATIONS SHOWN ARE BASED ON CONTOUR DATA OBTAINED FROM THE TNRIS DATABASE. VERIFY ELEVATIONS PRIOR TO CONSTRUCTION.
3. ALL DISTURBED AREAS BELOW THE 541' CONTOUR LINE SHALL BE RESTORED TO PRE-DEVELOPED CONDITIONS.
4. POSITIVE DRAINAGE SHALL BE PROVIDED AT ALL LOCATIONS.
5. SEE SHEET C400-C402 FOR DETAILS.
6. NO LAND DISTURBING ACTIVITIES ON NTMWD SHALL OCCUR WITHOUT PRIOR WRITTEN AUTHORIZATION FROM NTMWD.
7. NTMWD FLOWAGE EASEMENT CONSISTS OF THAT LAND BETWEEN THE 541' MSL CONTOUR AND 545' MSL CONTOUR.
8. ALL FACILITIES TO BE DESIGNED AND CONSTRUCTED TO CONFORM TO ADA STANDARDS.
9. ALL LIGHTING SHOWN TO BE INDIVIDUAL SOLAR POWERED.
10. EXACT ALIGNMENT OF ALL PATHS ON NTMWD PROPERTY TO BE DETERMINED BY NTMWD PRIOR TO CONSTRUCTION.
11. EXCEPT AS SHOWN ON THESE PLANS, ALL NTMWD BOUNDARY MARKERS SHALL BE PLACED BY THE INDIVIDUAL LOT OWNERS.
12. THE PENINSULA PLAT INSTRUMENT #P2023000017.
13. THE SHORES AT THE PENINSULA PLAT INSTRUMENT #P2023000018.
14. CONTOURS SHOWN ARE FROM THE TEXAS NATURAL RESOURCES INFORMATION SYSTEM (TNRIS) DATAHUB DATED 04/21/2021.

DRAFT

ABBOTT CONSULTING & ENGINEERING, LLC
P.O. Box 997
Canton, TX 75103
Brian@Abbott-CE.com
Phone: (214) 616-0787
Texas Firm #: F-21189

THE PENINSULA & THE SHORES AT BOIS D'ARC LAKE
FANNIN COUNTY, TEXAS

THE SHORES TENNIS/ PICKLEBALL COURT

09/13/2024

| REVISIONS | | |
|---|---|---|
| # | DATE | COMMENTS |

STATE OF TEXAS
BRIAN C. ABBOTT
108439
REGISTERED PROFESSIONAL ENGINEER

09/13/2024

SHEET NO.
C304

THE PENINSULA & THE SHORES – Fannin County, Texas – ACE Project No. 23158-03

Drawing File: C1.5 G&D 23158-03.dwg
Date/Time: Sep 13, 2024 – 4:14pm

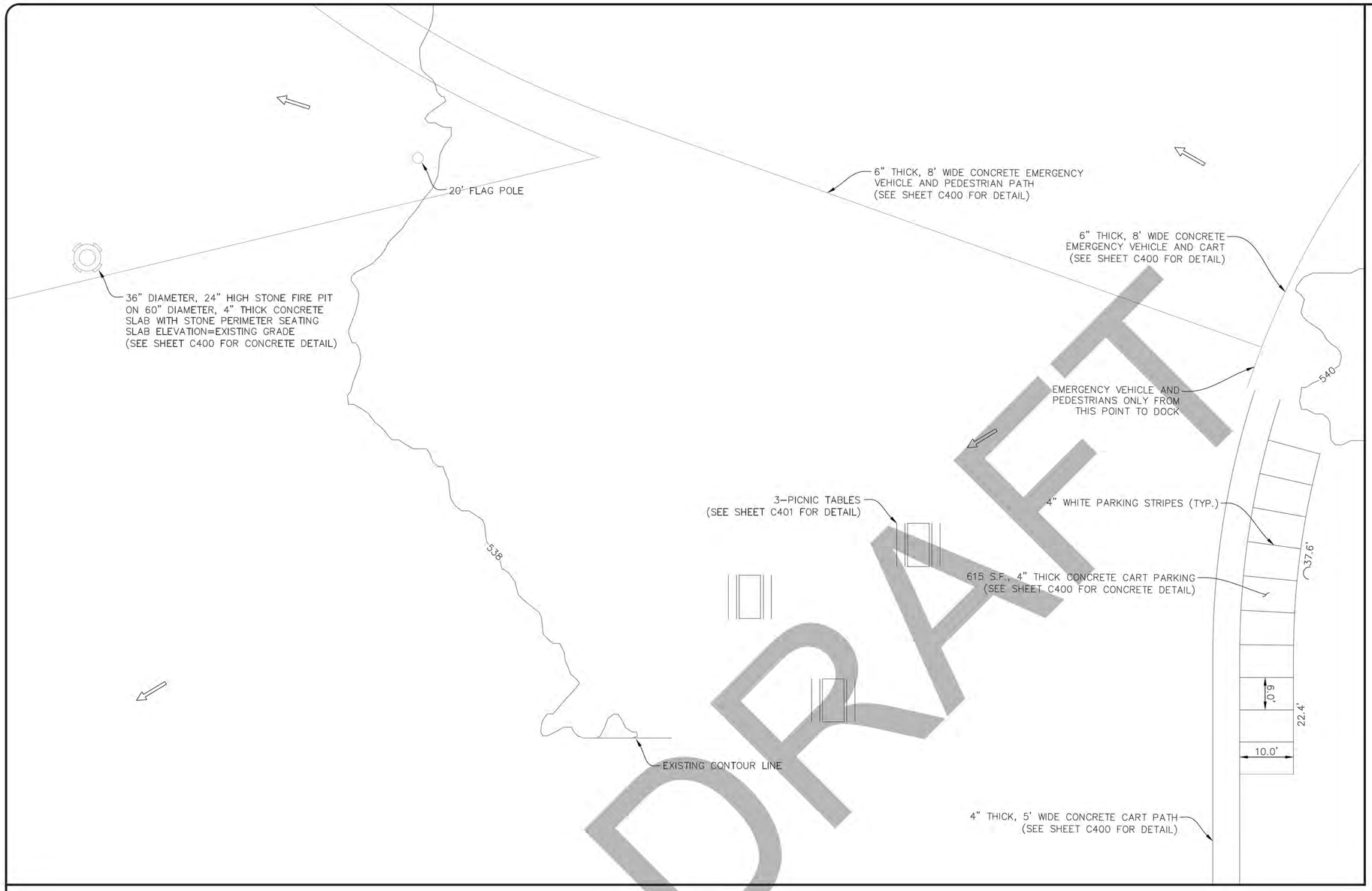


GRAPHIC SCALE

10 0 5 10

( IN FEET )
1 inch = 10 ft.

## LEGEND

DRAINAGE DIRECTION

## NOTES

1. REFERENCE SEPARATE DOCK PLANS FOR STRUCTURAL, ELECTRICAL AND ELEVATIONS.
2. ALL ELEVATIONS SHOWN ARE BASED ON CONTOUR DATA OBTAINED FROM THE TNRIS DATABASE. VERIFY ELEVATIONS PRIOR TO CONSTRUCTION.
3. ALL DISTURBED AREAS BELOW THE 541' CONTOUR LINE SHALL BE RESTORED TO PRE-DEVELOPED CONDITIONS.
4. POSITIVE DRAINAGE SHALL BE PROVIDED AT ALL LOCATIONS.
5. SEE SHEET C400-C402 FOR DETAILS.
6. NO LAND DISTURBING ACTIVITIES ON NTMWD SHALL OCCUR WITHOUT PRIOR WRITTEN AUTHORIZATION FROM NTMWD.
7. NTMWD FLOWAGE EASEMENT CONSISTS OF THAT LAND BETWEEN THE 541' MSL CONTOUR AND 545' MSL CONTOUR.
8. ALL FACILITIES TO BE DESIGNED AND CONSTRUCTED TO CONFORM TO ADA STANDARDS.
9. ALL LIGHTING SHOWN TO BE INDIVIDUAL SOLAR POWERED.
10. EXACT ALIGNMENT OF ALL PATHS ON NTMWD PROPERTY TO BE DETERMINED BY NTMWD PRIOR TO CONSTRUCTION.
11. EXCEPT AS SHOWN ON THESE PLANS, ALL NTMWD BOUNDARY MARKERS SHALL BE PLACED BY THE INDIVIDUAL LOT OWNERS.
12. ADEQUATE TURNAROUND SPACE SHALL BE PROVIDED ADJACENT TO GOLF CART PARKING AREA.
13. THE PENINSULA PLAT INSTRUMENT #P2023000017.
14. THE SHORES AT THE PENINSULA PLAT INSTRUMENT #P2023000018.
15. CONTOURS SHOWN ARE FROM THE TEXAS NATURAL RESOURCES INFORMATION SYSTEM (TNRIS) DATAHUB DATED 04/21/2021.


ABBOTT CONSULTING & ENGINEERING, LLC

P.O. Box 997
Canton, TX 75103
Brian@Abbott-CE.com

Phone: (214) 616-0787
Texas Firm #: F-21189


THE PENINSULA & THE SHORES – Fannin County, Texas – ACE Project No. 23158-03

# THE PENINSULA & THE SHORES AT BOIS D'ARC LAKE

FANNIN COUNTY, TEXAS

# THE SHORES CART PARKING FIRE PIT, AND FLAG POLE

09/13/2024

| REVISIONS | | |
|---|---|---|
| # | DATE | COMMENTS |

STATE OF TEXAS
BRIAN C. ABBOTT
108439
REGISTERED
PROFESSIONAL ENGINEER

09/13/2024

SHEET NO.
C305

Drawing File: C1.5 GAD 23158-03.dwg
Date/Time: Sep 13, 2024 – 4:14pm

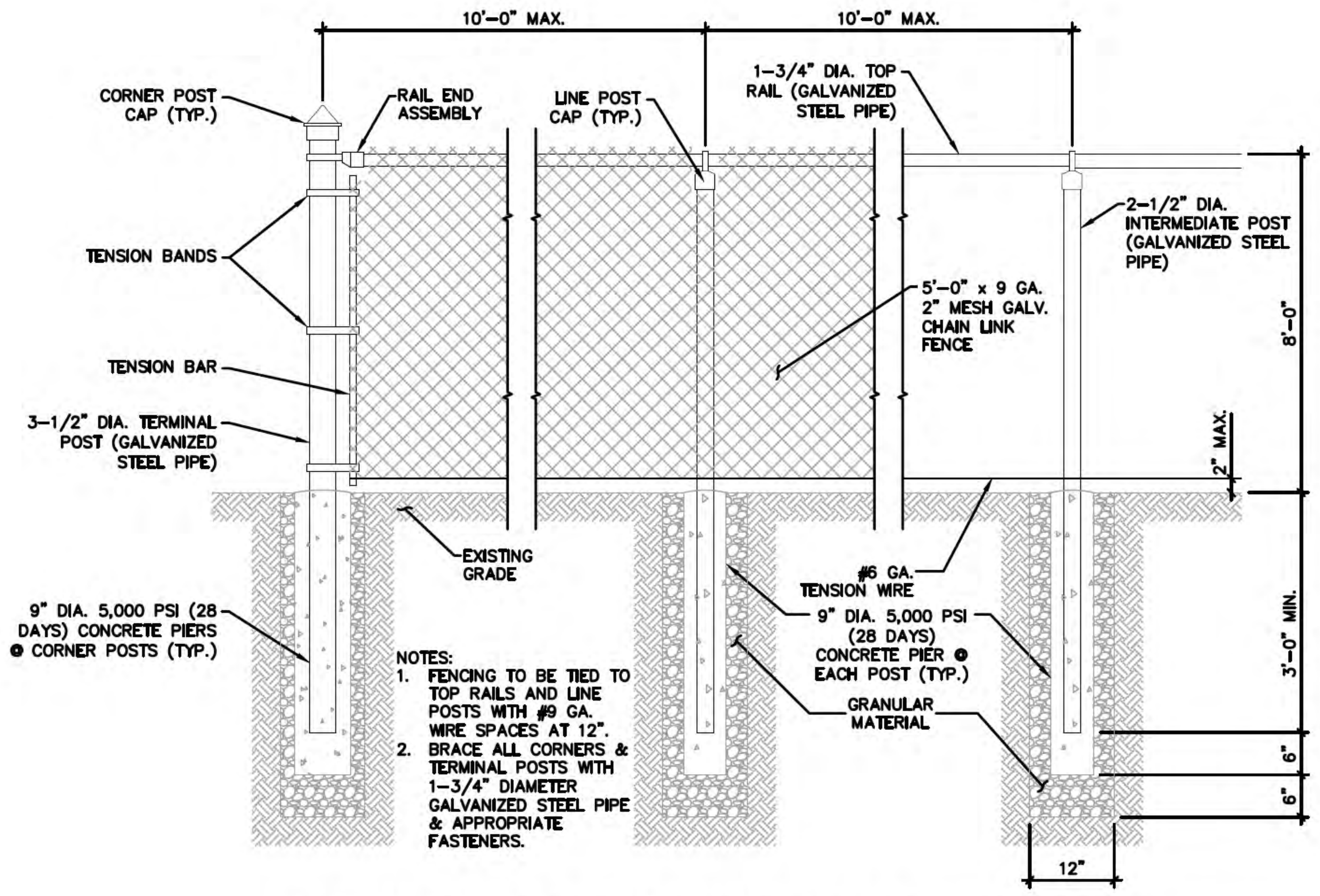


## 5' CHAIN LINK FENCE - DOG PARK

NTS

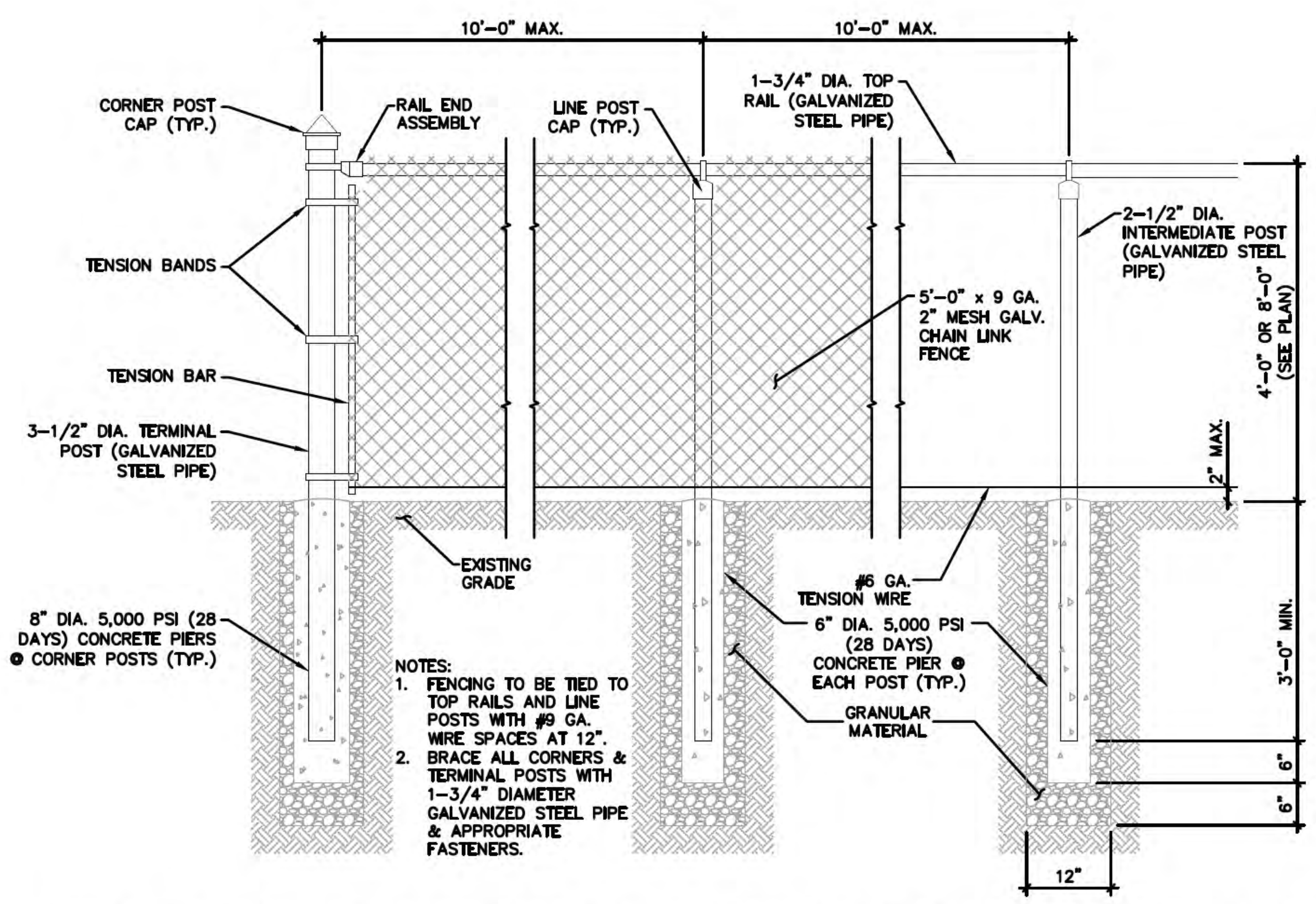


## 4'/8' CHAIN LINK FENCE - TENNIS/PICKLEBALL COURT

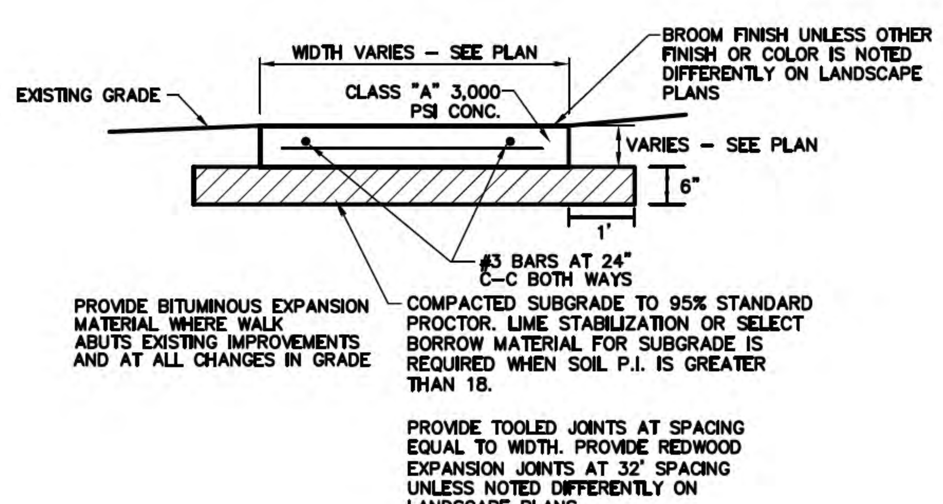


## CONCRETE SECTION

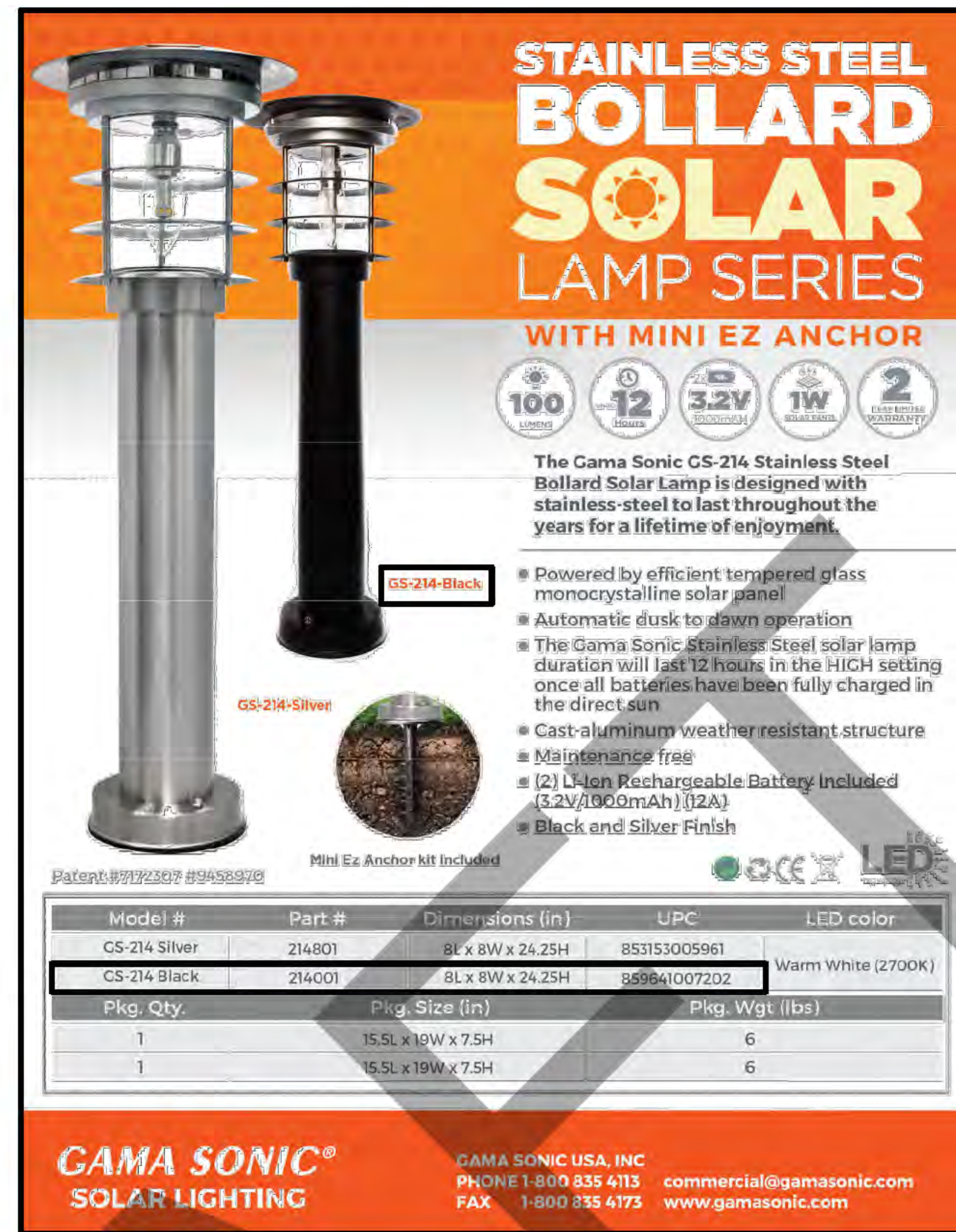

## SOLAR LIGHTS FOR SIDEWALK

NTS

GAMA SONIC GS–97SP 6.5 FT STANDARD POST – 3" FITTER

## SOLAR LIGHTS FOR GOLF CART TRAIL

NTS

ABBOTT CONSULTING & ENGINEERING, LLC
P.O. Box 997
Canton, TX 75103
Brian@Abbott-CE.com
Phone: (214) 616–0787
Texas Firm #: F–21189

THE PENINSULA & THE SHORES – Fannin County, Texas – ACE Project No. 23158–03

THE PENINSULA & THE SHORES AT BOIS D'ARC LAKE

FANNIN COUNTY, TEXAS

CONSTRUCTION DETAILS

09/13/2024

| REVISIONS | | |
|---|---|---|
| # | DATE | COMMENTS |

STATE OF TEXAS
BRIAN C. ABBOTT
108439
REGISTERED PROFESSIONAL ENGINEER
09/13/2024

SHEET NO.
C400

Drawing File: C2 DETAILS 23158–03.dwg
DateTime: Sep 13, 2024 – 4:14pm

BC1300 REV# 2 7-15-2016
BC1301
BC1302
BC1303

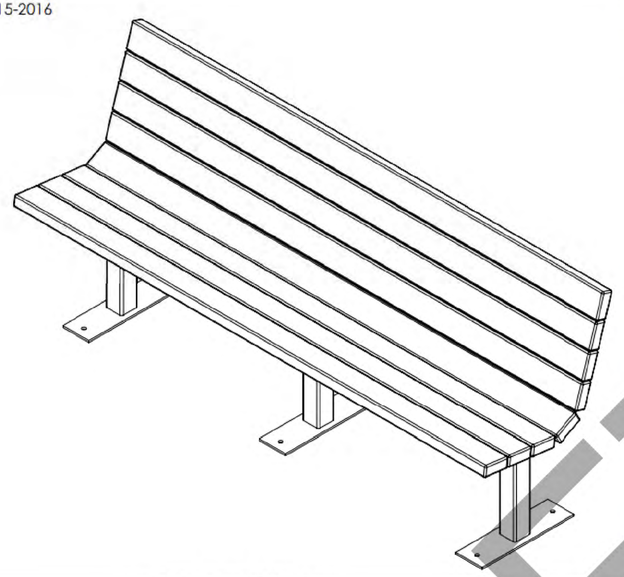

**PARK BENCH**

**Treasure Hunt** - Peacock Colors
Structure 5654-PP

Signature: _____

Note: Colors above are for representational purposes only. Actual colors may vary slightly.
Posts: Spring Green • Decks, Super Sonic Slide, Bongos: Blue • Metals: Sky Blue • Bubble Panel, Surge Climber, Double Super Sonic Slide: Beige

BYO RECREATION
www.BYOPlayground.com

**PET WASTE STATION**

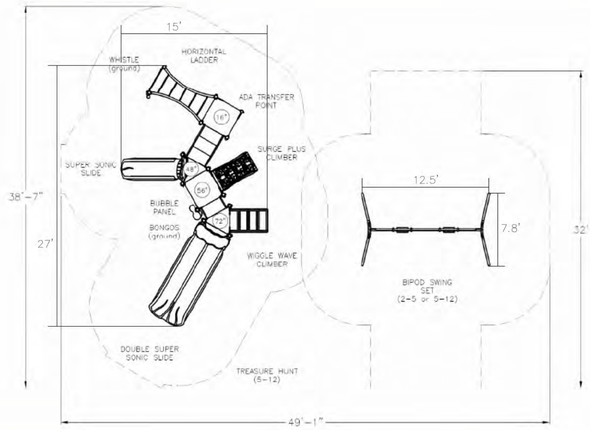


Lakewood Land LLC

Signature: _____

| | | | |
|---|---|---|---|
| **Equipment Age Range:** 2-5 or 5-12<br>**Critical Fall Height:** 8'<br>**User Capacity:** Up to 37<br>**Total Play Components:** 9<br>**Total Accessible Components:** 8 | **The above layout:**<br>✓ COMPLIES TO ASTM<br>✓ COMPLIES TO CPSC<br>✓ COMPLIES TO ADA | **Space Required:** 38'-7" x 49'-1"<br>**Surfacing Area:** 1,893 s.f.<br>**Surfacing Material:** By Others<br>**Surfacing Depth Required:** N/A<br>**Border Info:** By Others | **Drawn By:** S. Nance<br>**Date:** 4/23/2021<br>**Revision:**<br>**Scale:** 3/32" = 1'-0"<br>Drawing scaling possible only when in 8.5" x 11" format |

BYO RECREATION
www.BYOPlayground.com

**PLAYGROUND**

HIGHLAND PRODUCTS GROUP LLC

GENERAL SPECIFICATIONS:

MANUFACTURER'S QUALIFICATIONS

Highland Products Group maintains at all times a quality control program as herein outlines so as to insure that all precast meets all requirements as specified under physical requirements. All precast shall be manufactured by skilled workmen who have at least five years experience in similar work and supervised by foreman certified by the ACI (American Concrete Institute).

MANUFACTURING

All precast work shall be true to dimension and have clean, accurate arises and details faithfully executed. Reinforcing steel shall conform to work and shall have a minimum compressive strength of 5,000 psi at 28 days of age when tested by means of cylinder molds (6x12) from the materials. There shall be a maximum of 4-6% air entertainment for all precast according to ASTM standards.

REINFORCEMENT

All concrete products have reinforcment characteristics such as rebar or fiberglass.

MOLDS

The forms for the precast units shall be construcded of metal or fiberglass laminated designed to withstand casting pressures without distortion. All anchors, inserts, bolts, ect. will be placed and secured in the forms as required for the attachment and handling of the units. These shall be damped so as to hold them in position during fabrication.

PHYSICAL CHARACTERISTICS

All exposed surfaces are treated to remove the surface matrix and exposed the aggregate produced by chemical retardent - not sand blasting. All precast shall have the water-repellent sealer treatment applied in strict accordance with manufacturer's specifications. All tolerances shall be within 1/8" of specified dimensions, designed for structural analysis and calculation.

COLOR

Color to be uniform throughout as approved by owner or specifier in accordance with manufacturer's recommendation.

MATERIALS

Portland Cement: ASTM C150 Type 1 or 3
All aggregate to meet ASTM C33 Specifications

REQUIRED MATERIALS FOR APPROVAL

A. Shop drawings with dimensions, general contraction component parts, anchoring details and installation.
B. Samples upon request of architects.
C. Complete dates on manufacturer's and technical information.

ITEM: 154-1166
WEIGHT: 1,000 LBS

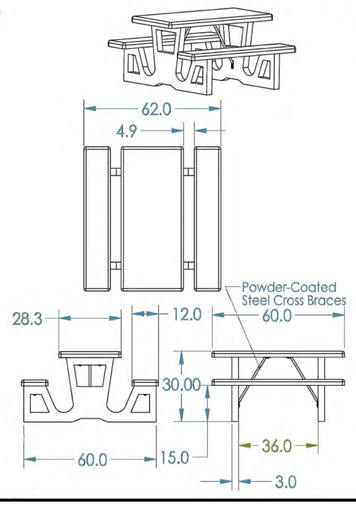

**PICNIC TABLE**

DRAFT

Drawing File: C2 DETAILS 23158-03.dwg
DateTime: Sep 13, 2024 – 4:14pm


ABBOTT CONSULTING & ENGINEERING, LLC
P.O. Box 997
Canton, TX 75103
Brian@Abbott-CE.com
Phone: (214) 616-0787
Texas Firm #: F-21189


THE PENINSULA & THE SHORES – Fannin County, Texas – ACE Project No. 23158-03

THE PENINSULA & THE SHORES AT BOIS D'ARC LAKE
FANNIN COUNTY, TEXAS

CONSTRUCTION DETAILS

09/13/2024

| REVISIONS | | |
|---|---|---|
| # | DATE | COMMENTS |

STATE OF TEXAS
BRIAN C. ABBOTT
108439
REGISTERED PROFESSIONAL ENGINEER

09/13/2024

SHEET NO.
C401

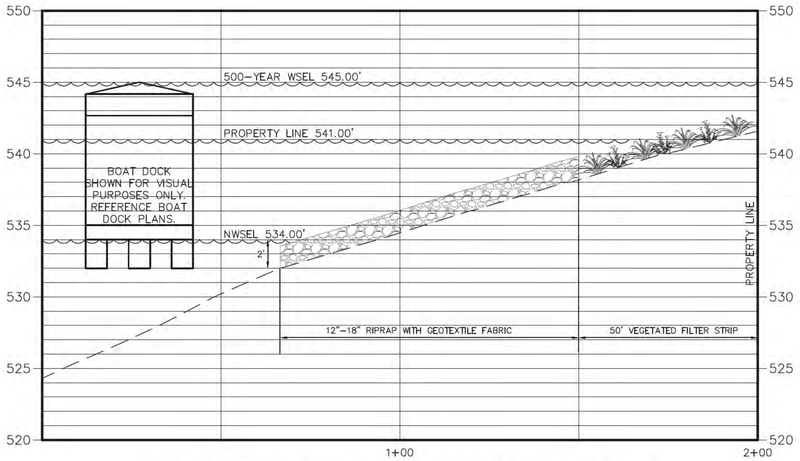


SHORELINE PROTECTION - THE PENINSULA COMMUNITY AREA

H: 1"=20'
V: 1"=5'

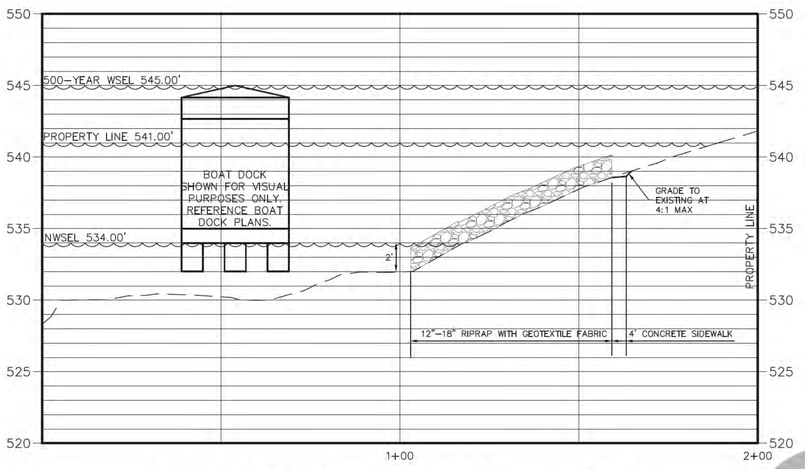


SHORELINE PROTECTION - THE PENINSULA SHARED BOAT DOCK

H: 1"=20'
V: 1"=5'

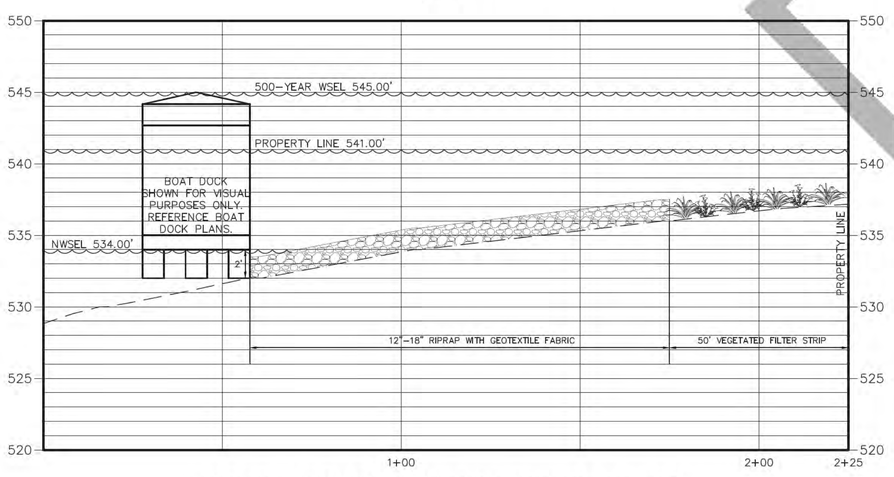


SHORELINE PROTECTION - THE SHORES SHARED BOAT DOCK

H: 1"=20'
V: 1"=5'

REVISED IN 2018

IBWM™ TECHNICAL MANUAL — CONSTRUCTION CONTROLS

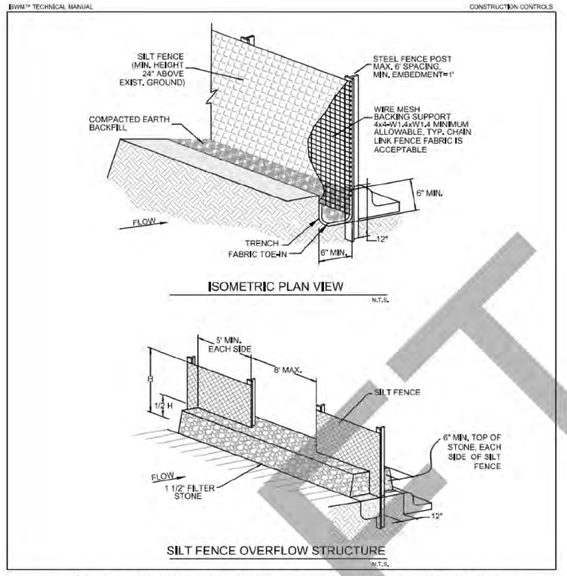


FIGURE 3.28 STANDARD CONSTRUCTION DETAIL - FOR SILT FENCE (1 OF 2)

SILT FENCE REVISED

REVISED IN 2018

IBWM™ TECHNICAL MANUAL — CONSTRUCTION CONTROLS

**SILT FENCE GENERAL NOTES:**

1. DESIGN SHALL SHOW ON THE DRAWINGS THE LOCATIONS WHERE OVERFLOW STRUCTURES SHALL BE INSTALLED. OVERFLOW STRUCTURES ARE REQUIRED AT ALL LOW POINTS AND AT A SPACING OF APPROXIMATELY 300 FEET WHERE NO LOW POINT IS APPARENT.

2. DESIGNER SHALL SHOW ON THE DRAWINGS THE LOCATIONS WHERE SILT FENCE IS TO BE TURNED UPSLOPE AT THE ENDS. UPSLOPE LENGTHS SHALL BE A MINIMUM OF 10 FEET.

3. POST WHICH SUPPORT THE SILT FENCE SHALL BE INSTALLED ON A SLIGHT ANGLE TOWARD THE ANTICIPATED RUNOFF SOURCE. POST MUST BE EMBEDDED A MINIMUM OF ONE FOOT.

4. THE TOE OF THE SILT FENCE SHALL BE TRENCHED IN WITH A SPADE OR MECHANICAL TRENCHER, SO THAT THE DOWNSLOPE FACE OF THE TRENCH IS FLAT AND PERPENDICULAR TO THE LINE OF FLOW.

5. THE TRENCH MUST BE A MINIMUM OF 6 INCHES DEEP AND 6 INCHES WIDE TO ALLOW FOR THE SILT FENCE FABRIC TO BE LAID IN THE GROUND AND BACKFILLED WITH COMPACTED MATERIAL.

6. SILT FENCE SHOULD BE SECURELY FASTENED TO EACH SUPPORT POST OR TO WIRE BACKING, WHICH IN TURN IS ATTACHED TO THE FENCE POST. THERE SHALL BE A 3 FOOT OVERLAP, SECURELY FASTENED WHERE ENDS OF FABRIC MEET.

7. INSPECTION SHALL BE AS SPECIFIED IN THE SWPPP. REPAIR OR REPLACEMENT SHALL BE MADE PROMPTLY AS NEEDED.

8. SILT FENCE SHALL BE REMOVED WHEN FINAL STABILIZATION IS ACHIEVED OR ANOTHER EROSION OR SEDIMENT CONTROL DEVICE IS EMPLOYED.

9. ACCUMULATED SILT SHALL BE REMOVED WHEN IT REACHES A DEPTH OF HALF THE HEIGHT OF THE FENCE. THE SILT SHALL BE DISPOSED OF AT AN APPROVED SITE AND IN SUCH A MANNER AS TO NOT CONTRIBUTE TO ADDITIONAL SILTATION.

10. SEE NCTCOG STANDARD SPECIFICATIONS (2017), SECTION 202.5

FIGURE 3.28 NOTES FOR SILT FENCE (2 OF 2)

SILT FENCE REVISED

## SILT FENCE & OVERFLOW STRUCTURE

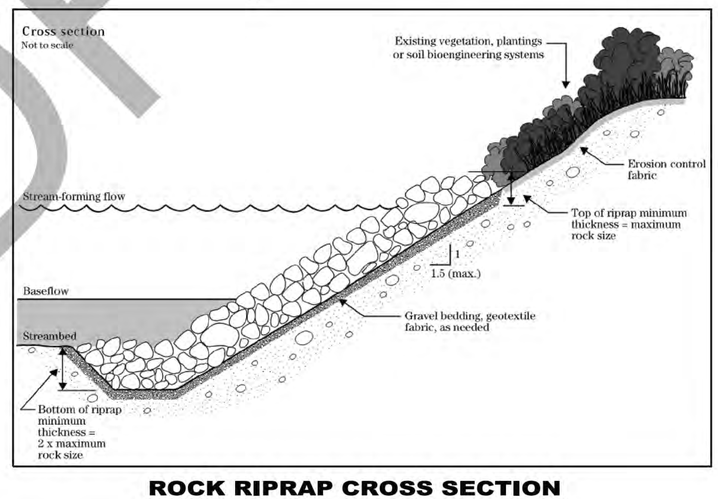


## ROCK RIPRAP CROSS SECTION

(USDA CH. 16: STREAMBANK AND SHORELINE PROTECTION)

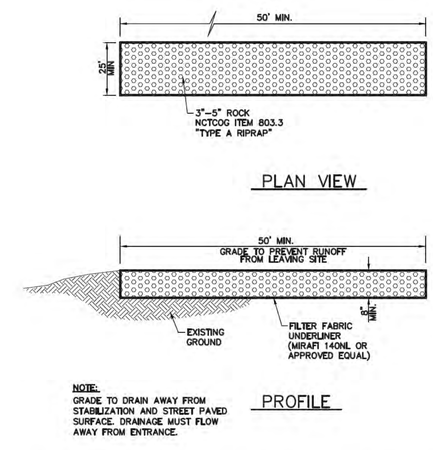


NOTE:
GRADE TO DRAIN AWAY FROM STABILIZATION AND STREET PAVED SURFACE. DRAINAGE MUST FLOW AWAY FROM ENTRANCE.

## STABILIZED CONSTRUCTION EXIT

NOT TO SCALE

DRAFT

ABBOTT CONSULTING & ENGINEERING, LLC
P.O. Box 997
Canton, TX 75103
Brian@Abbott-CE.com
Phone: (214) 616-0787
Texas Firm #: F-21189

THE PENINSULA & THE SHORES AT BOIS D'ARC LAKE
FANNIN COUNTY, TEXAS

CONSTRUCTION DETAILS

09/13/2024

| REVISIONS | | | |
|---|---|---|---|
| | | DATE | COMMENTS |

STATE OF TEXAS
BRIAN C. ABBOTT
108439
REGISTERED PROFESSIONAL ENGINEER
09/13/2024

SHEET NO.
C402

THE PENINSULA & THE SHORES – Fannin County, Texas – ACE Project No. 23158-03

Drawing File: C2 DETAILS 23158-03.dwg
Date/Time: Sep 13, 2024 – 4:15pm

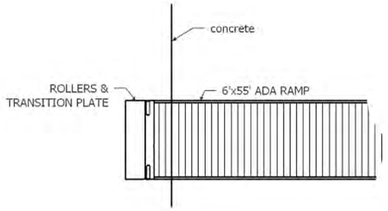


Top Ramp View

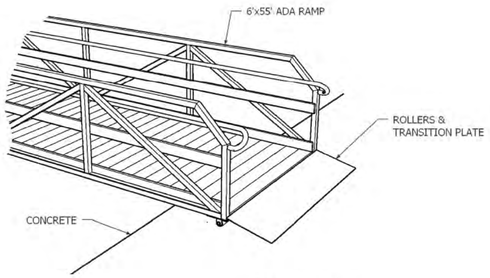


ISO Ramp View

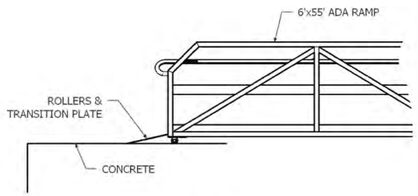


Side Ramp View

**NOTES:**

RAMP DETAIL TYPICAL FOR SHORES PENINSULA JOBS:

- LOTS 16-23
- SHORES 20 SLIP COMMON AREA
- PENINSULA 20 SLIP COMMON AREA

**FLOTATION SYSTEMS, INC.**
2700 ALABAMA HIGHWAY 69 SOUTH
CULLMAN, AL. | 800-711-1785 | aluminumboatdocks.com

**CUSTOMER:** Shores Peninsula

**DEALER:** Jeff Stamey

**Drawing Date:** 5-15-24
**Revision #:**
**Revision Date:**
**Scale:** NTS

## DOCK RAMP

DRAFT

ABBOTT CONSULTING & ENGINEERING, LLC
P.O. Box 997
Canton, TX 75103
Brian@Abbott-CE.com
Phone: (214) 616-0787
Texas Firm #: F-21189

THE PENINSULA & THE SHORES – Fannin County, Texas – ACE Project No. 23158-03

THE PENINSULA & THE SHORES AT BOIS D'ARC LAKE
FANNIN COUNTY, TEXAS

CONSTRUCTION DETAILS

09/13/2024

| REVISIONS | | |
|---|---|---|
| # | DATE | COMMENTS |

STATE OF TEXAS
BRIAN C. ABBOTT
108439
REGISTERED PROFESSIONAL ENGINEER
09/13/2024

SHEET NO.
C403

Drawing File: C2 DETAILS 23158-03.dwg
Date/Time: Sep 13, 2024 – 4:15pm

FLOTATION SYSTEMS, INC.™
ALUMINUM BOAT DOCKS

# Architectural Planning Criteria
# Dock Specifications

Complete, correct and in compliance with the SMP.

**Structural Components:**

**Commercial and residential -**

All structural aluminum components shall be of 6000 series high st ngth marine grade aluminum.

Minimum thickness on all outer main frame E-ch nnel shal be 3/16” and secondary components a minimum of 1/8”.

Main frame E-channel minimum depth 0 with outer wa l ribbed to provide aesthetics and increase web stiffness.

All tubing shall have radius cor and a m mum wall thickness of 1/8”; maximum 1/4”

**Decking Surface:**

Extruded Lockd ™ al minum decking panels to be 1” x 6” with raised ridges for added slip resistanc

Joist spacing to e set on a maximum of 36” centers maintaining minimal surface deflection.

Decking finish-Textu d powder coat finish meets or exceeds AAMA 2604 for Salt Spray Resistance and Outdoor Exposure testing in South Florida.

Available colors: Buckskin, Hearthstone, and Granite Gray.

**Hardware:**

All self drilling screws, bolts, nuts, and washers are stainless steel.
300 series - bolts
400 series - self drilling screws (zinc plating on self drilling flooring screws)

Main frame bolts shall be a minimum 3/8” diameter with self locking nuts.

DRAFT

**Flotation:**

Corp Approved EPS Billets – Totally enclosed with high-density polyethylene. Polyethylene shall contain UV Ray inhibitors and Carbon Black pigment to protect against ultraviolet deterioration. Nominal wall thickness .150. Impervious to petroleum products. Heavy duty mounting flanges and slots. 12-year warranty.

Foam: Virgin polystyrene beads closed cell with water absorption less than 3lbs./c.f. at seven days, when tested in accordance with ASTM C272.

**Dock access:**

Ramp/gangways to be all aluminum construction using an arched b idge truss design. High strength to weight ratio. Reinforcement gussets at all c rners and conn ction points. Main structural component to be 2" tubing with radius co ners.

Handrails/Guard Rail
37" to 42" above walking surface. No sharp corners, b rrs, etc.

Ramp/gangways will meet ADA requirements w e required with a minimum clear width of 5' and will include guardrail, handrail and ick p ate.

Infill pickets are available to improv safety i desired. Spacing is 4" OC.

Rail shall be designed to a comm date 50# concentrated load in any direction. Alternately guards shall be designed to r i t a load of 50# per linear foot applied in any direction.

**Dock railing:**

Staircase and up er deck rail meet standard code with 4" centers for safety. Powder coat finish. Available n 36" t 42" height.

**Roof Panels - Commercial and Residential**

26 Gauge R-Loc panels with a Valspar Weather X coating. 30-year limited panel warranty. Optional 35-year warranty upon request.

Trimmed out & finished upper and lower perimeter edges.
Color chart available.

**Bumpers:**

Vinyl Horizontal – All swim platforms or edges without vertical posts shall receive a P-shape, black rub rail fastened with stainless steel hardware.

Vinyl horizontal corner bumpers provided at finished ends of P-shape rub rail.

DRAFT

Frame Bumper – 1’ x 1’ polyethylene bumper, typically used around main frame perimeter concealing entire 10” band.

**Cleats:**

All cleats shall be 8” nylon. 10” cleats available if required.

Cleats will be provided on each side of every boat slip.

All parts of cleats should be smooth and incorporate large radii to ensure rope longevity.

**System Design:**

Main frame substructure consists of 2 1/4” x 10” heavy gauge E-channel integrated throughout.

Floor joist spacing for aluminum decking 24” OC. For deck ng upplied by others 12” up to 24” OC.

Floor joist material heavy weight 2 1/4” x 10” E-ch nnel, 2 ¼” x 8” C-ch nnel, and 2” x 2” square tube. Full 10” depth at post areas and bra es.

Reinforcement bracing at high stress areas, corners, an connection points.

Roof support post constructed of 4” x 4” 1/8 w h radius corners integrated into main frame with 4” x 10” aluminum sleeve “rec ivers”
4” x 4” typically used for diago l bracing here required for added strength and stability.

**Residential** - Structural r of suppor posts sha be a maximum of 8’ spacing for upper deck roofs and 10’ spacing for g ble an hip f

All purling mate al sha be of 000 series heavy strength aluminum 2” x 2” tubing with all ends capped a d shall be s ured t C-channel truss system using stainless steel bolts, nuts and washers

Roof support posts hall be ncorporated into 8” C-channel roof truss and 10” E-channel main frame using cor er leeve extrusions with a 1/8” wall thickness.

Roof posts are secured in sleeves using double 3/8” stainless steel bolts and nylon lock nuts to give maximum anchorage and a secure connection.

**Commercial –** Structural roof support posts shall be a maximum of 6’ spacing to meet R-Loc panel requirements.

All purling material shall be of 6000 series heavy strength aluminum 3” x 7” Z-beam and shall be secured to 4” support posts using stainless steel bolts, nuts and washers.

Double diagonal gussets included at all post sleeve locations in main frame as well as additional gussets added at all high stress and tension locations such as ramp/gangway and anchoring attachment points.

DRAFT

**Size Requirements:** Dock footprint shall meet square footage criteria regulated by permitting department.

DRAFT

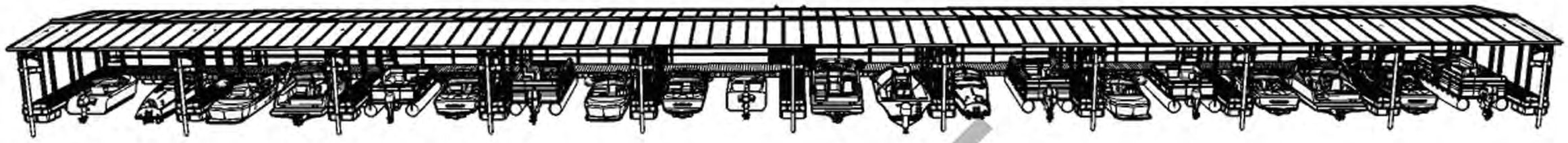

# THE SHORES AT THE COMMON AREA
## 2769 County Road 2730
## Honey Grove, TX 75446

DRA NG LIST

| SHEET NUMBER | DESCRIPTION | SHEET NU ER | DESCRIPTION |
|---|---|---|---|
| 1 | BANK VIEW A | 22 | 8' COLLAR FRONT |
| 2 | BA K VIE B | 23 | 8' COLLAR TOP |
| 3 | ANK VIEW | 24 | 8' COLLAR |
| 4 | LEFT VIEW | 25 | 4IN STUB UP |
| 5 | A GLE UTLIST | 26 | 3' COLLAR VIEWS |
| 6 | WA R VIEW A | 27 | 3' COLLAR |
| 7 | WATER EW B | 28 | 21' POLE |
| | ATER VIE C | 29 | SR1 |
| | AN VIEW | 30 | SR2 |
| 10 | ANC ORING VIEW | 31 | RAMP SIDE VIEW |
| 11 | F OAT DIAGRAM | 32 | RAMP SIDE DIAGRAM |
| 12 | ROOF ASSEMBLY | 33 | RAMP DECKING DIAGRAM |
| 13 | FRAME DIAGRAM | 34 | RAMP DECKING CUTLIST |
| 14 | DECKING DIAGRAM | 35 | END RAMP DETAIL |
| 15 | POST DIAGRAM | 36 | MIDDLE RAMP DETAIL |
| 16 | BW627L | 37 | EQ END RAMP DETAIL |
| 17 | BW625 | 38 | EQ END RAMP ATTACHMENT |
| 18 | BW625A | 39 | EQUALIZER |
| 19 | ATTACHMENT SHEET | 40 | UNDERCARRIAGE |
| 20 | F424 | 41 | ACCESSORIES |
| 21 | 8' COLLAR SIDE | 42 | LOAD SHEET |

DRAFT

FLOTATION SYSTEMS, INC.™
ALUMINUM BOAT DOCKS

AUTOCAD .DWG

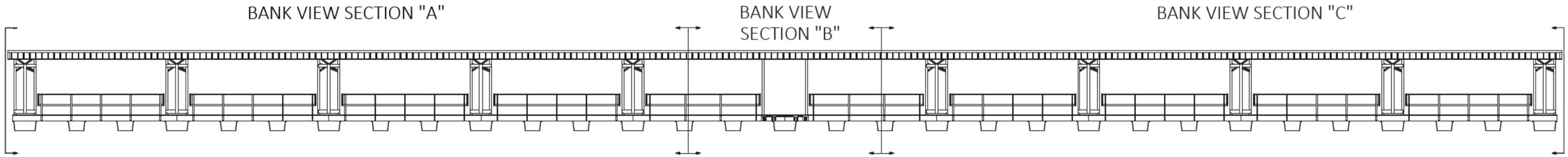


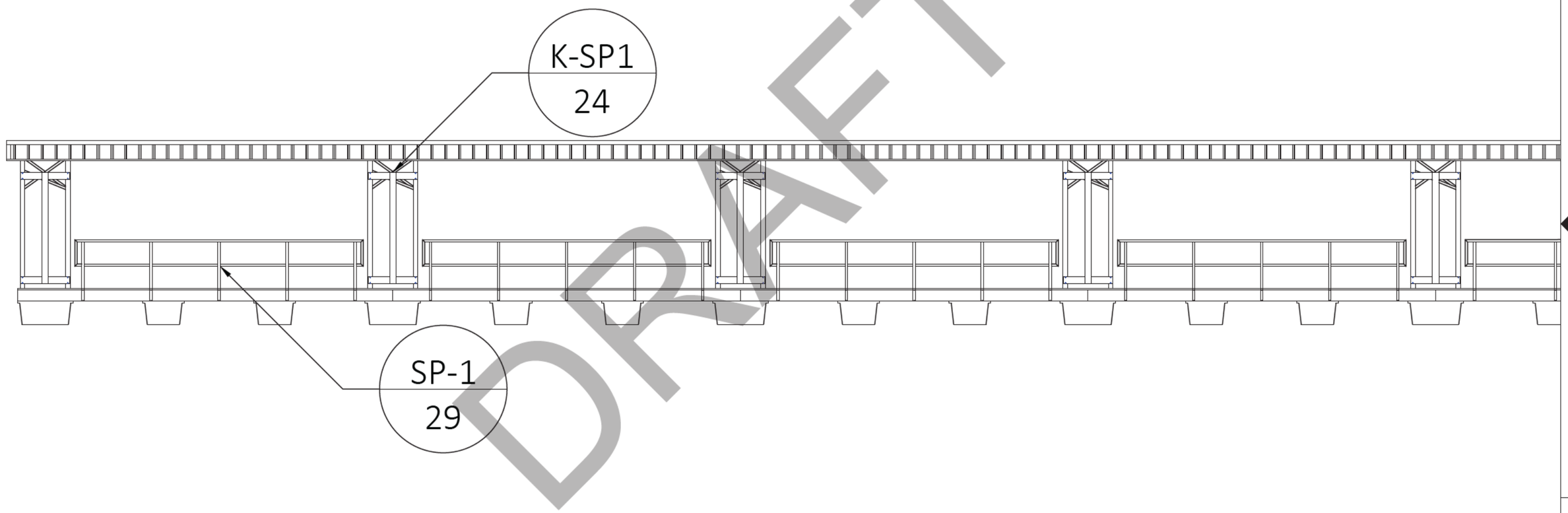


DRAFT

D:\Pictures\LOGO\FLOTATION LOGO\PSI LOGO B W.JPG

| -SHEET DETAIL- | |
|---|---|
| FILE NAME/CUSTOMER → | SHORES AT THE COMMON AREA.dwg |
| DRAWN: 6/1/2023 | BANK VIEW SECTION "A" |
| CHECKED: | |
| MANAG.APPR: | |
| ISSUED TO: MANUFACTURE | |
| DESIGN DRAFTER: R.BAKER | SIZE B · SCALE 1:88 · DWG TYPE/NO. · REV 0 |
| FABRICATOR: | SHEET 1 OF 42 |

AUTOCAD .DWG

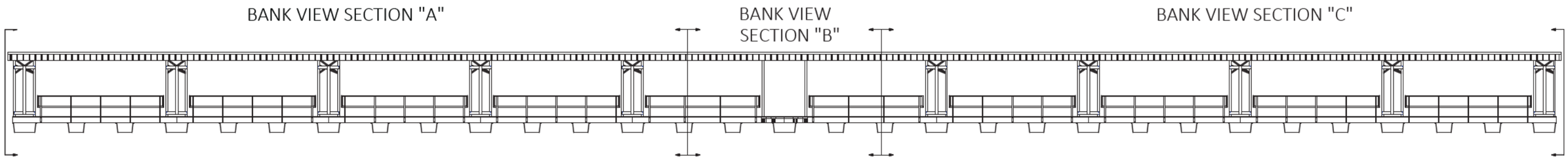


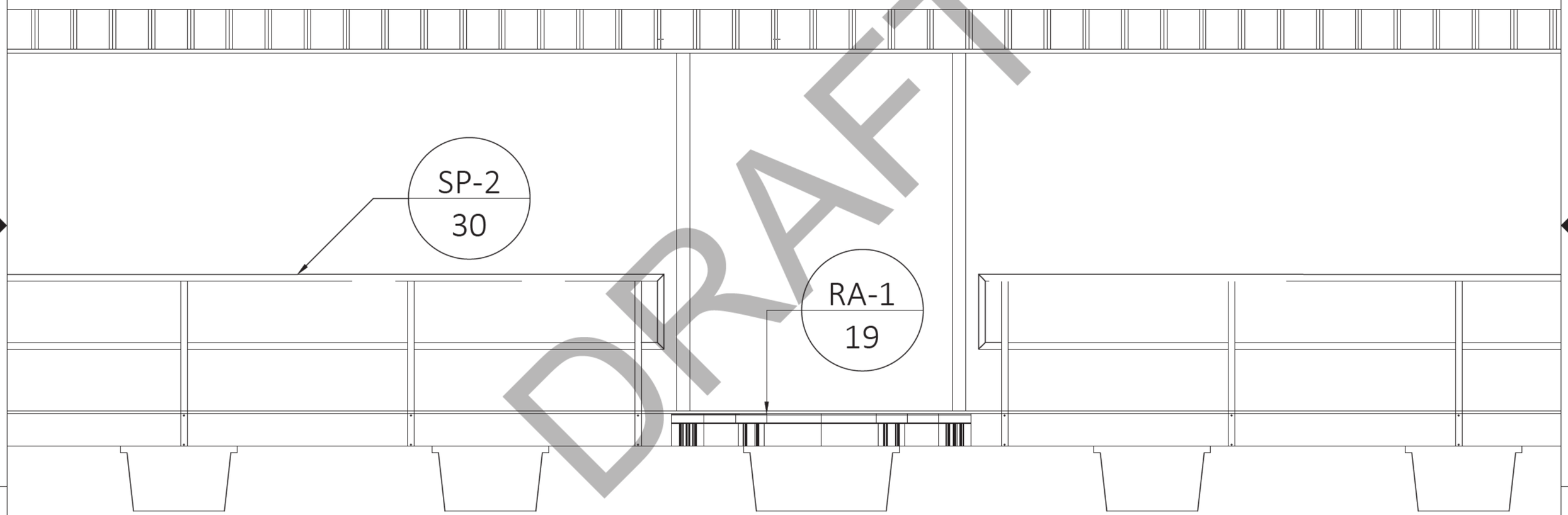


DRAFT

D:\Pictures\LOGO\LOCATION LOGO\PS LOGO BW.JPG

| | |
|---|---|
| FILE NAME/CUSTOMER | SHORES AT THE COMMON AREA.dwg |
| DRAWN: 6/1/2023 | BANK VIEW SECTION "B" |
| CHECKED: | |
| MANAG.APPR: | |
| ISSUED TO: MANUFACTURE | |
| DESIGN DRAFTER: R.BAKER | SIZE B · SCALE 1:32 · DWG TYPE/NO. · REV 0 |
| FABRICATOR: | SHEET 2 OF 42 |

AUTOCAD .DWG

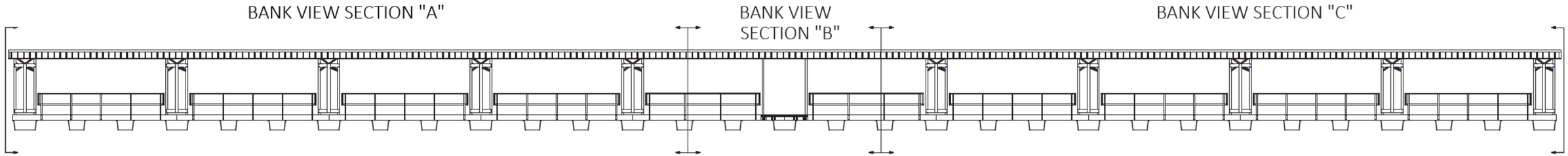


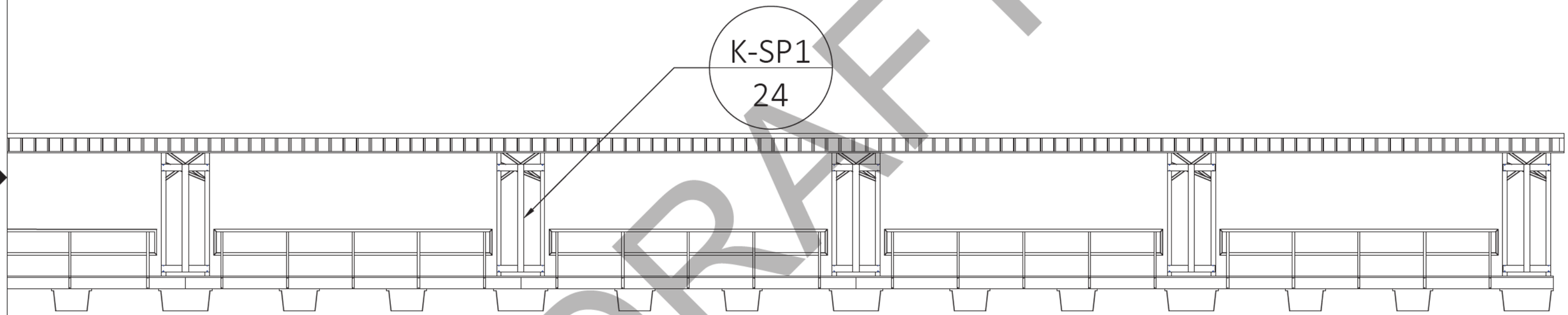


DRAFT

D:\Pictures\LOGO\LOTATION LOGO\PS LOGO BW.JPG

| -SHEET DETAIL- | |
|---|---|
| FILE NAME/CUSTOMER → | SHORES AT THE COMMON AREA.dwg |
| DRAWN: 6/1/2023 | BANK VIEW SECTION "C" |
| CHECKED: | |
| MANAG.APPR: | |
| ISSUED TO: MANUFACTURE | |
| DESIGN DRAFTER: R.BAKER | |
| FABRICATOR: | |

| SIZE | SCALE | DWG TYPE/NO. | REV |
|---|---|---|---|
| B | 1:80 | | 0 |

SHEET 3 OF 42

AUTOCAD .DWG

NOTE:
SEE POST DIAGRAM SH-15 FOR EXACT LOCATIONS
WHERE LATERAL BRACING IS REQUIRED. (G, H, I, J)

(2) 3/8"X5 1/2" H.B.
(4) 3/8"X7/8" WASHERS
(2) 3/8" NYLOCK NUTS
PER POST

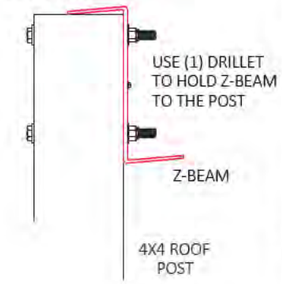


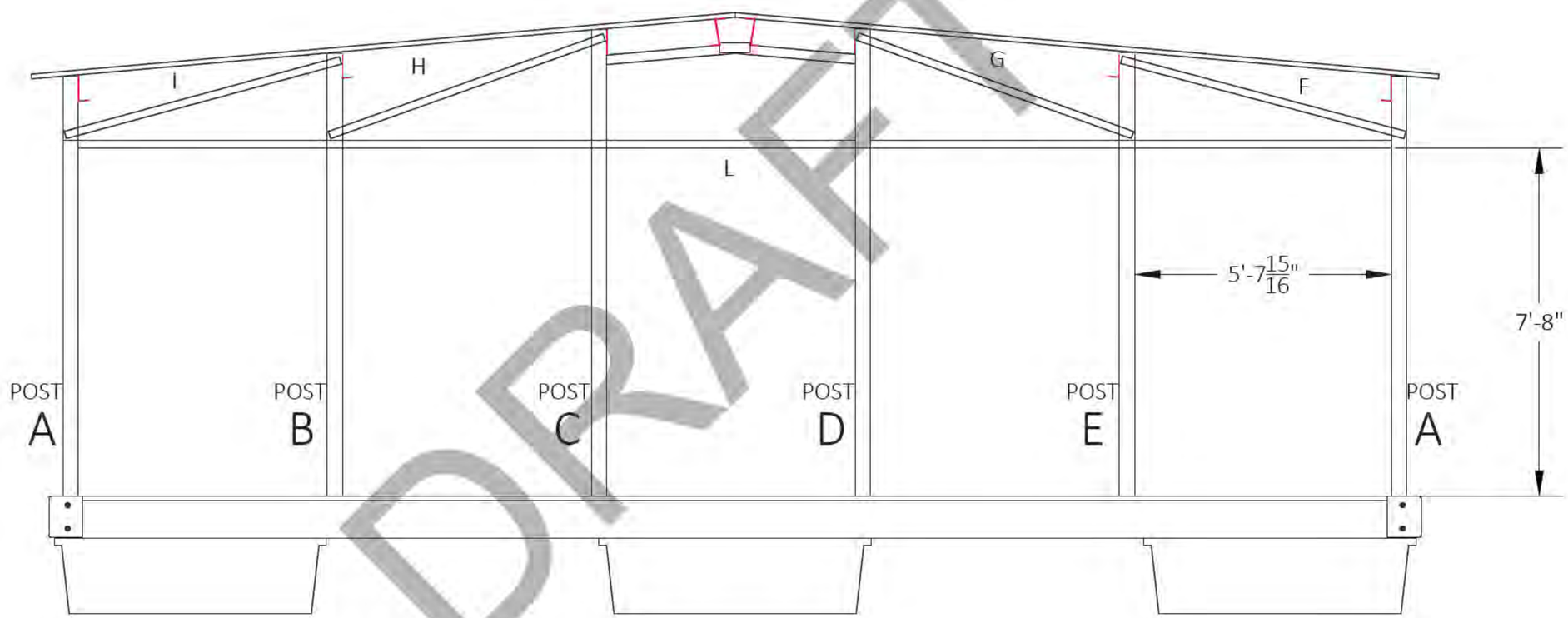


DRAFT

| | | |
|---|---|---|
| -SHEET DETAIL- | | |
| FILE NAME/CUSTOMER → | SHORES AT THE COMMON AREA.dwg | |
| DRAWN: 6/1/2023 | LEFT SIDE VIEW | |
| CHECKED: | | |
| MANAG.APPR: | | |
| ISSUED TO: MANUFACTURE | | |
| DESIGN DRAFTER: R.BAKER | SIZE B / SCALE 1:34 | DWG TYPE/NO. / REV 0 |
| FABRICATOR: | | SHEET 4 OF 42 |

D:\Pictures\LOGO\VLOTATION LOGO\PS LOGO BW.JPG

AUTOCAD .DWG

# ROOF MATERIAL CUT LIST

| | QTY. | 2" X 2" ANGLE BRACING |
|---|---|---|
| F | 10 | 6'-5 1/12" LG. |
| G | 10 | 6'-5 1/8" LG. |
| H | 10 | 6'-5 1/16" LG. |
| I | 10 | 6'-3 5/16" |
| J | 20 | 4'-5 1/4" |
| K | 40 | 5'-2 7/16 |
| L | 10 | 29'-7 1/8 |
| | | |
| | | |
| | QTY. | Z-BEAM |
| N | 16 | 30' |
| O | 64 | 29' |

DRAFT

D:\Pictures\LOGOVK\STATION LOGO\FS LOGO B W.JPG

-SHEET DETAIL-

FILE NAME/CUSTOMER → SHORES AT THE COMMON AREA.dwg

DRAWN: 6/1/2023

CHECKED:

MANAG.APPR:

ISSUED TO: MANUFACTURE

DESIGN DRAFTER: R.BAKER

FABRICATOR:

RIGHT SIDE VIEW

| SIZE | SCALE | DWG TYPE/NO. | REV |
|---|---|---|---|
| B | 1:34 | | 0 |

SHEET 5 OF 42

AUTOCAD .DWG

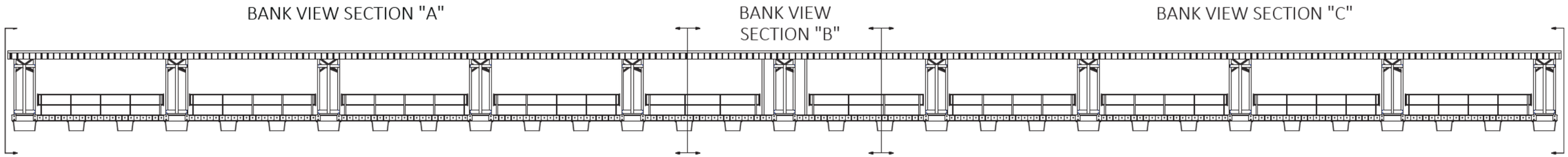


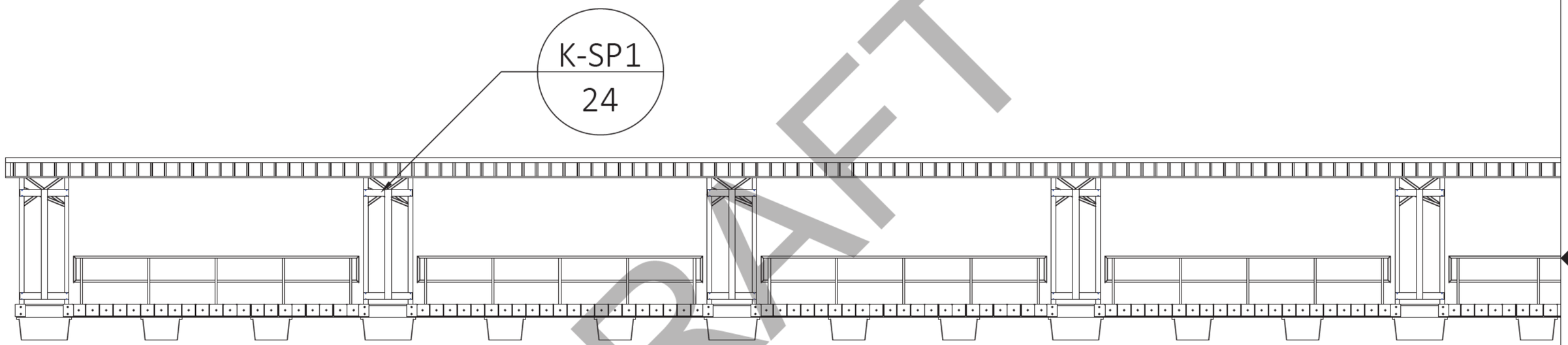


DRAFT

D:\Pictures\LOGO\VLOTATION LOGO\VS LOGO B W.JPG

| -SHEET DETAIL- | |
|---|---|
| FILE NAME/CUSTOMER → | SHORES AT THE COMMON AREA.dwg |
| DRAWN: 6/1/2023 | WATER VIEW SECTION "A" |
| CHECKED: | |
| MANAG.APPR: | |
| ISSUED TO: MANUFACTURE | |
| DESIGN DRAFTER: R.BAKER | SIZE B · SCALE 1:50 · DWG TYPE/NO. · REV 0 |
| FABRICATOR: | SHEET 6 OF 42 |

AUTOCAD .DWG

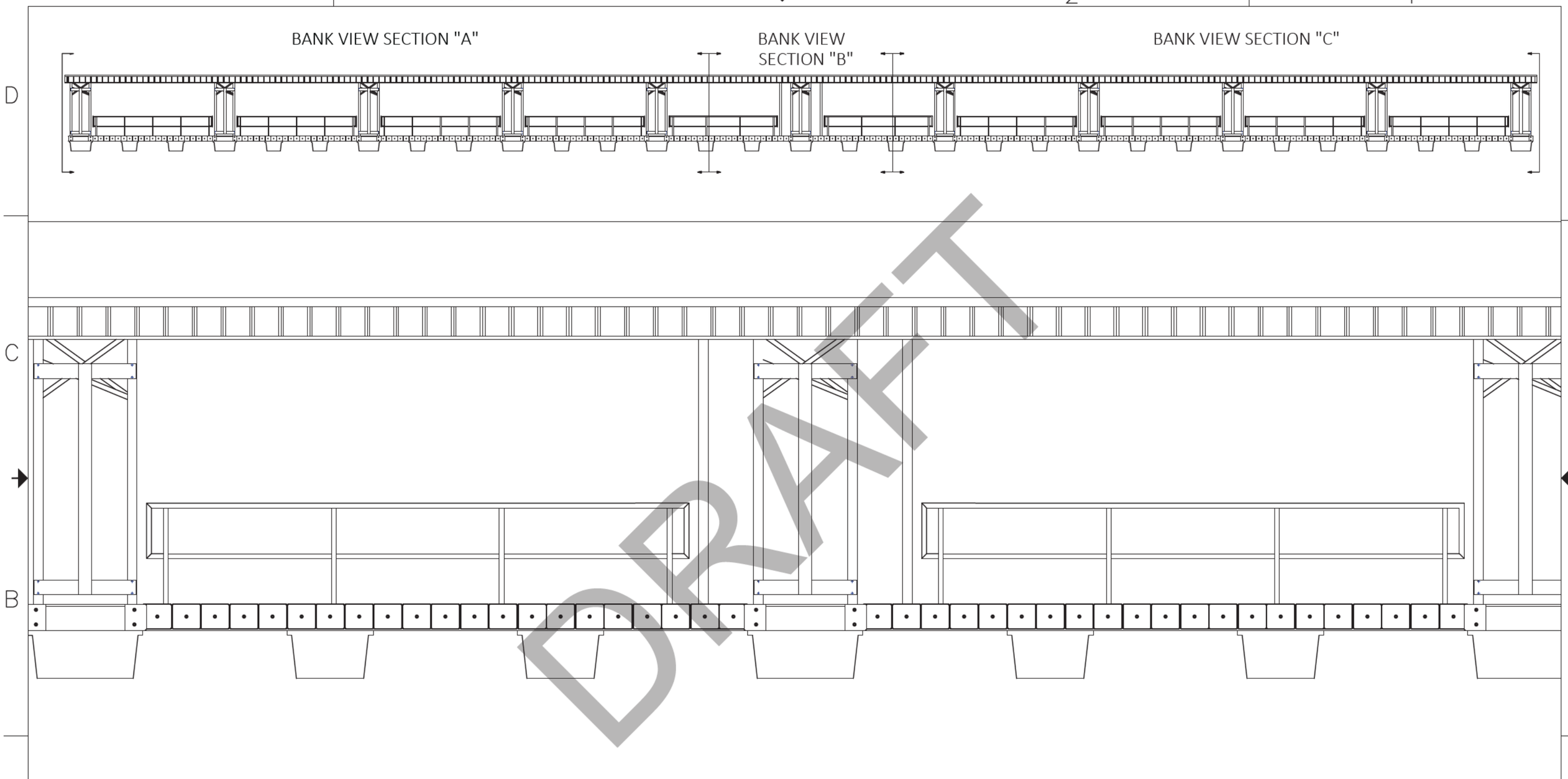


| | |
|---|---|
| –SHEET DETAIL– | |
| FILE NAME/CUSTOMER → | SHORES AT THE COMMON AREA.dwg |
| DRAWN: 6/1/2023 | WATER VIEW SECTION "A" |
| CHECKED: | |
| MANAG.APPR: | |
| ISSUED TO: MANUFACTURE | |
| DESIGN DRAFTER: R.BAKER | SIZE B · SCALE 1:50 · DWG TYPE/NO. · REV 0 |
| FABRICATOR: | SHEET 7 OF 42 |

D:\Pictures\LOGO\FLOTATION LOGO\FB LOGO BW.JPG

AUTOCAD .DWG

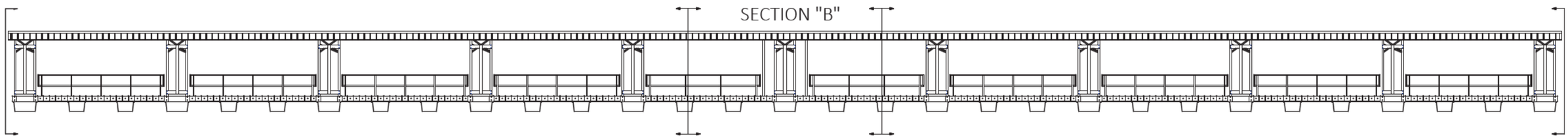


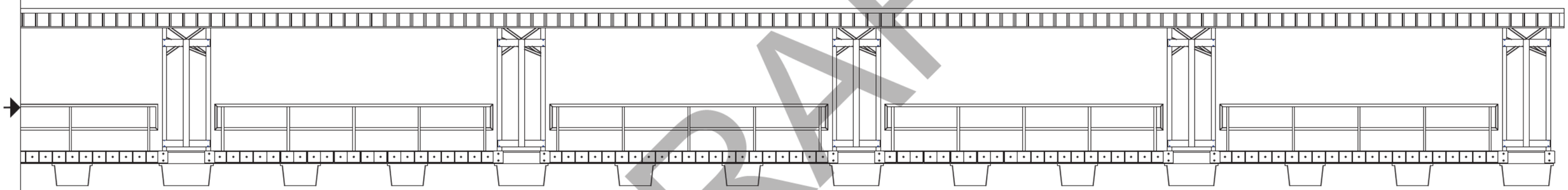

DRAFT

D:\Pictures\LOGO\VLCITATION LOGO\VS LOGO B W.JPG

| -SHEET DETAIL- | |
|---|---|
| FILE NAME/CUSTOMER | SHORES AT THE COMMON AREA.dwg |
| DRAWN: 6/1/2023 | WATER VIEW SECTION "A" |
| CHECKED: | |
| MANAG.APPR: | |
| ISSUED TO: MANUFACTURE | |
| DESIGN DRAFTER: R.BAKER | SIZE B · SCALE 1:80 · DWG TYPE/NO. · REV 0 |
| FABRICATOR: | SHEET 8 OF 42 |

AUTOCAD .DWG

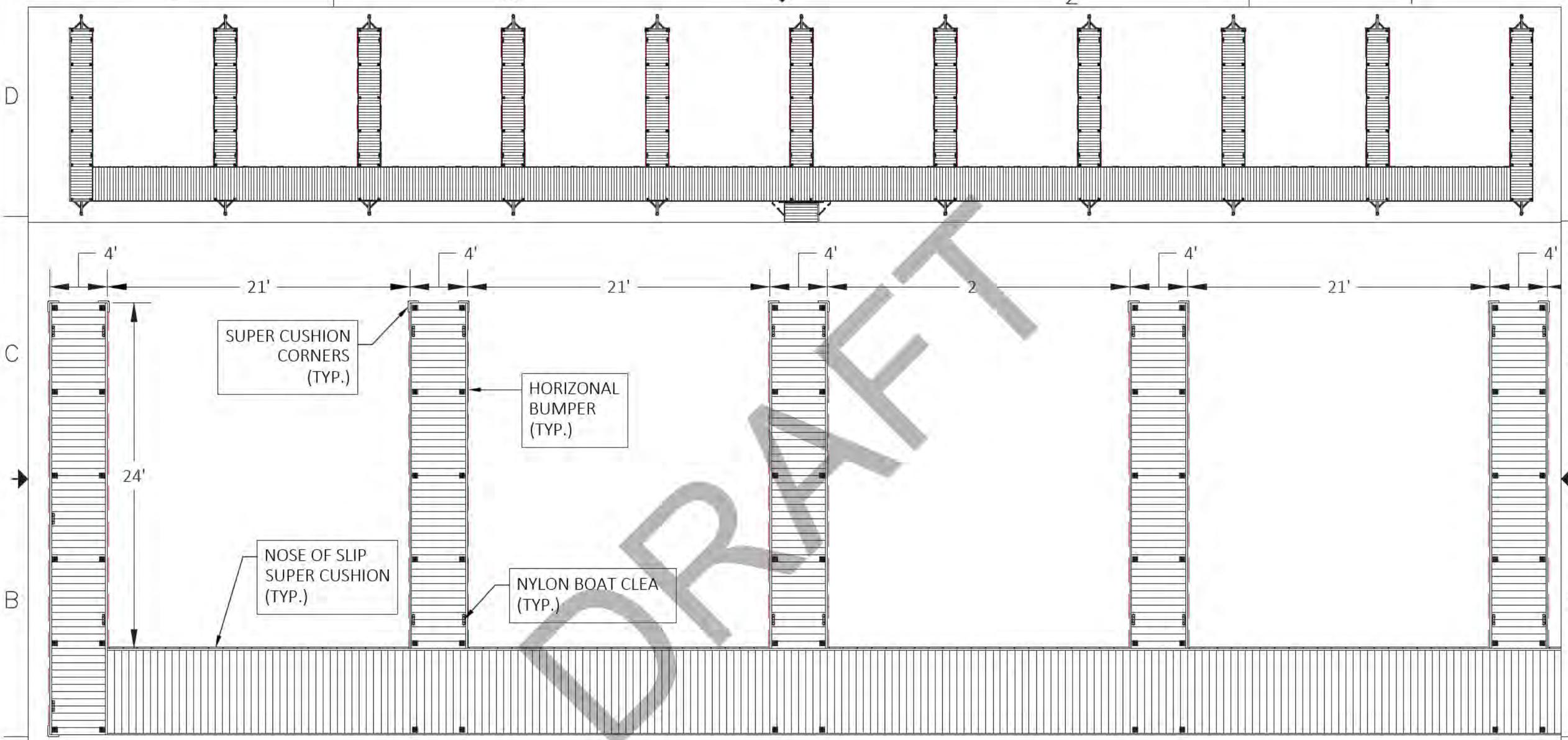


DRAFT

ACC. INCLUDE:

(105) NOSE OF SLIP SUPER CUSHION
(42) NYLON BOAT CLEATS
(540') HORIZONTAL BUMPER
(24) SUPER CUSHION CORNER BUMPERS

| -SHEET DETAIL- | | | |
|---|---|---|---|
| FILE NAME/CUSTOMER → | SHORES AT THE COMMON AREA.dwg | | |
| DRAWN: 6/1/2023 | PLAN VIEW | | |
| CHECKED: | | | |
| MANAG.APPR: | | | |
| ISSUED TO: MANUFACTURE | | | |
| DESIGN DRAFTER: R.BAKER | SIZE B | SCALE 1:50 | DWG TYPE/NO. | REV 0 |
| FABRICATOR: | | | SHEET 9 OF 42 |

G:\Pictures\LOGOS\LOCATION LOGOS\LOGO.JPG

AUTOCAD .DWG

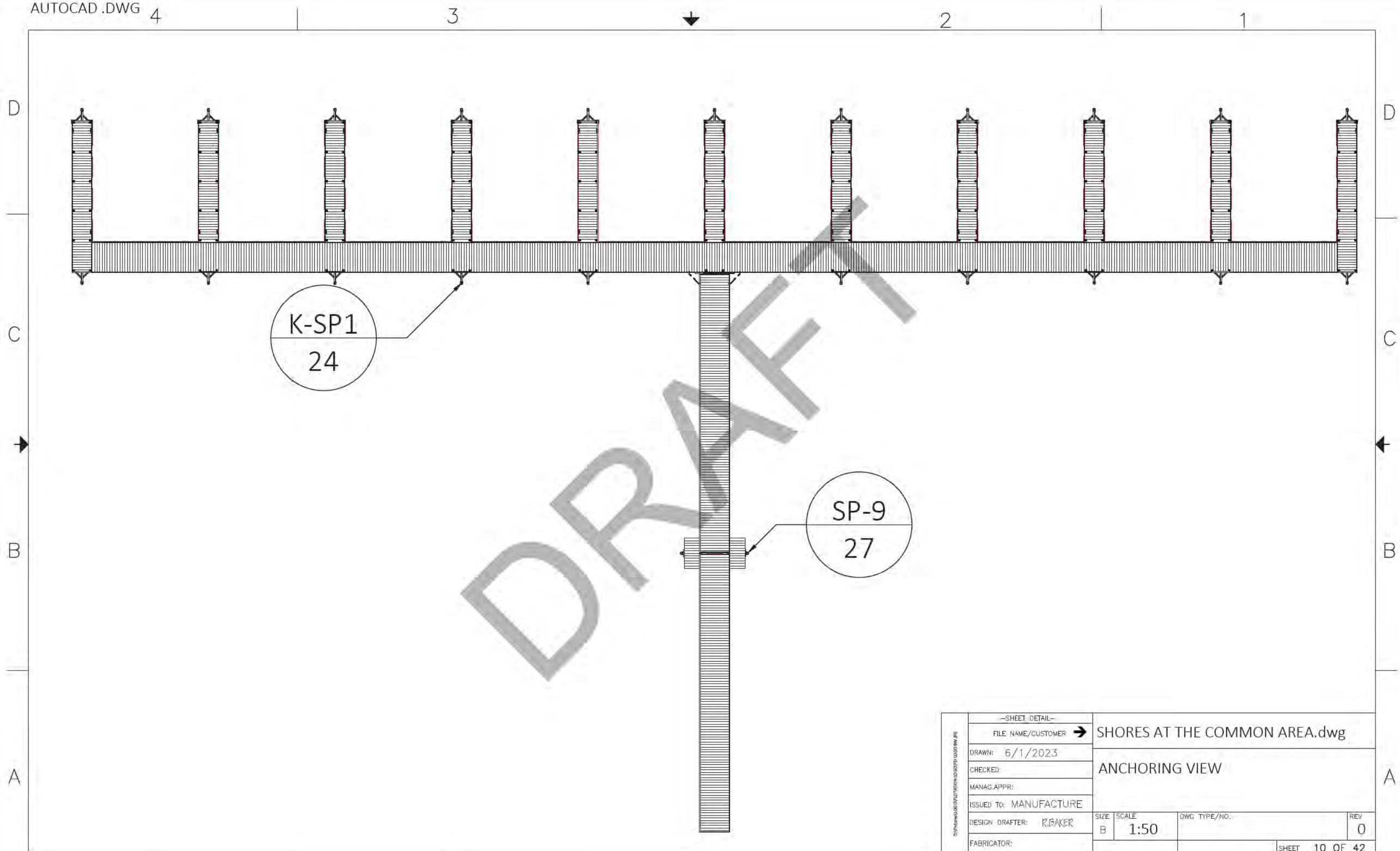


| | |
|---|---|
| —SHEET DETAIL— | |
| FILE NAME/CUSTOMER → | SHORES AT THE COMMON AREA.dwg |
| DRAWN: 6/1/2023 | ANCHORING VIEW |
| CHECKED: | |
| MANAG.APPR: | |
| ISSUED TO: MANUFACTURE | |
| DESIGN DRAFTER: R.BAKER | SIZE B · SCALE 1:50 · DWG TYPE/NO.: · REV 0 |
| FABRICATOR: | SHEET 10 OF 42 |

D:\Pictures\LOCATION\LOGO\BW.JPG

AUTOCAD .DWG

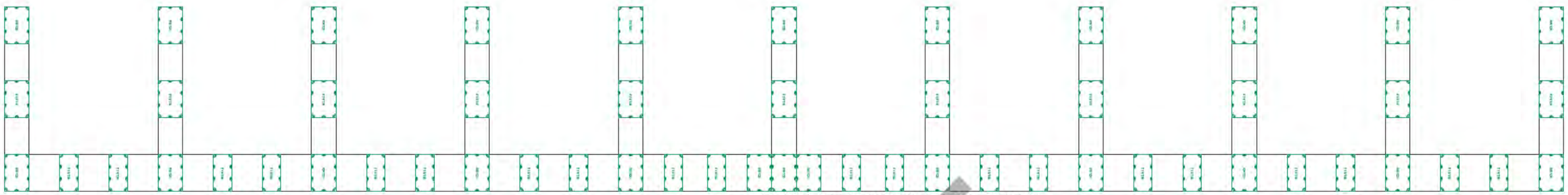

RAMP ATTACHMENT F OATATION

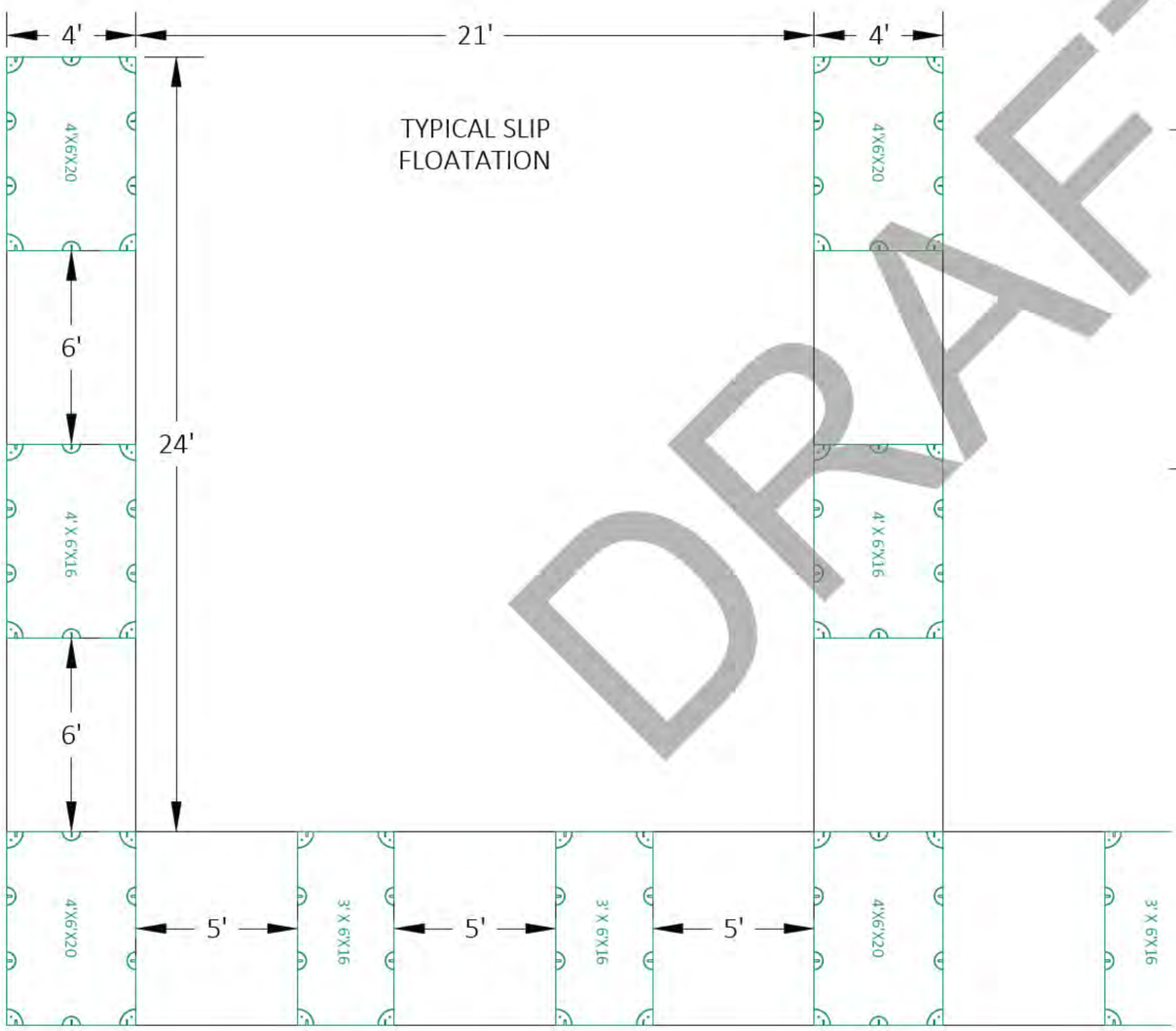


RAMP ATTACHMENT FLOATATION

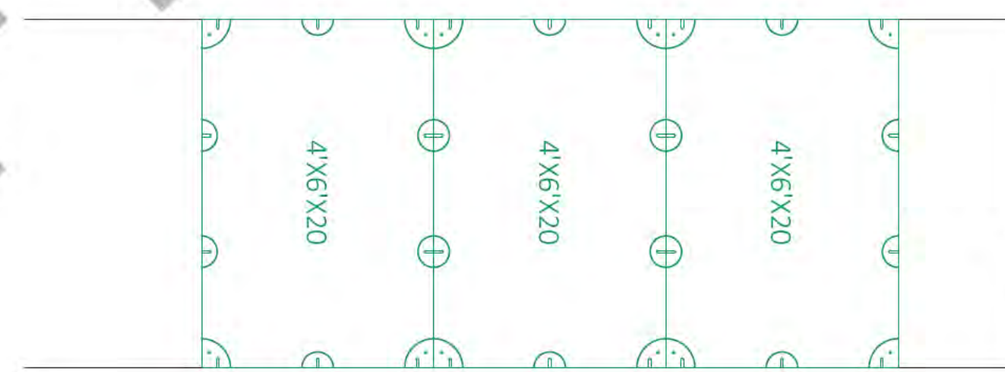


4 X 6 X16-11
4 X 6 X 20-24
3 X 6 X 16-20

DRAFT

| | | | | |
|---|---|---|---|---|
| D:\Pictures\LOGO\FLOATATION LOGO\FLOATATION LOGO.JPG | —SHEET DETAIL— | SHORES AT THE COMMON AREA.dwg | | |
| | FILE NAME/CUSTOMER → | | | |
| | DRAWN: 6/1/2023 | FLOAT DIAGRAM | | |
| | CHECKED: | | | |
| | MANAG.APPR: | | | |
| | ISSUED TO: MANUFACTURE | | | |
| | DESIGN DRAFTER: R.BAKER | SIZE B / SCALE 1:56 | DWG TYPE/NO. | REV 0 |
| | FABRICATOR: | | | SHEET 11 OF 42 |

AUTOCAD .DWG

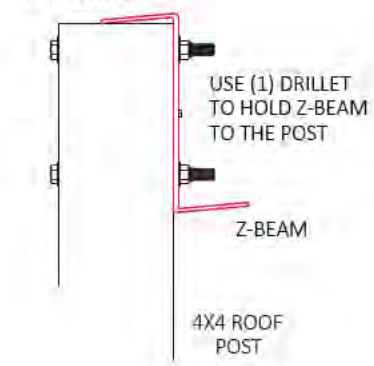


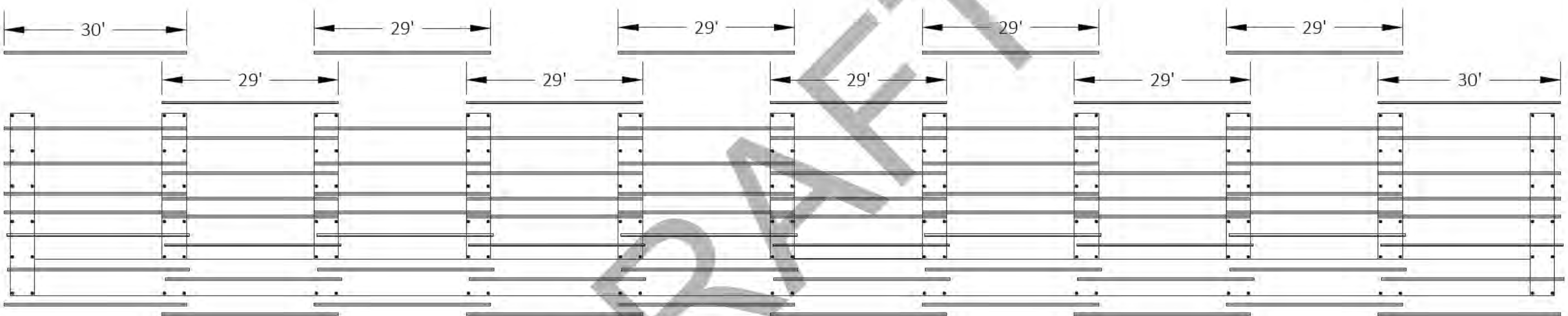


DRAFT

| | |
|---|---|
| —SHEET DETAIL— | |
| FILE NAME/CUSTOMER → | SHORES AT THE COMMON AREA.dwg |
| DRAWN: 6/1/2023 | ROOF ASSEMBLY |
| CHECKED: | |
| MANAG.APPR: | |
| ISSUED TO: MANUFACTURE | |
| DESIGN DRAFTER: R.BAKER | SIZE B · SCALE 1:180 · DWG TYPE/NO. · REV. 0 |
| FABRICATOR: | SHEET 12 OF 42 |

AUTOCAD .DWG

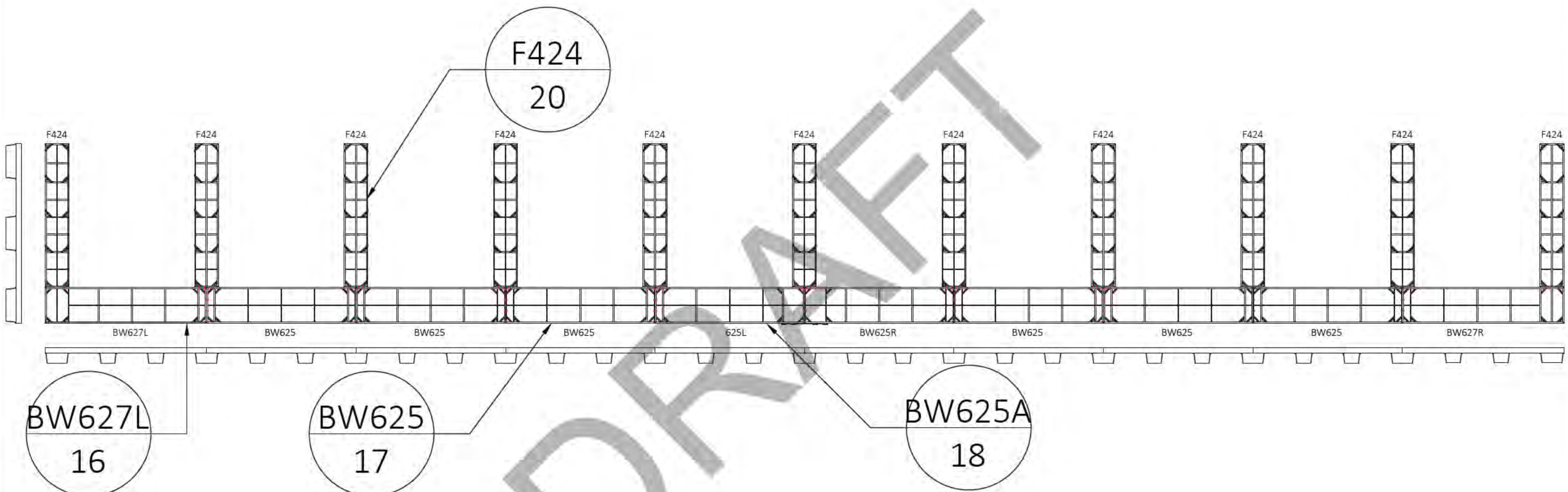


DRAFT

—SHEET DETAIL—
FILE NAME/CUSTOMER → SHORES AT THE COMMON AREA.dwg
DRAWN: 6/1/2023
CHECKED:
MANAG.APPR:
ISSUED TO: MANUFACTURE
DESIGN DRAFTER: R.BAKER
FABRICATOR:

FRAME DIAGRAM

SIZE B | SCALE 1:180 | DWG TYPE/NO. | REV 0

SHEET 13 OF 42

AUTOCAD .DWG

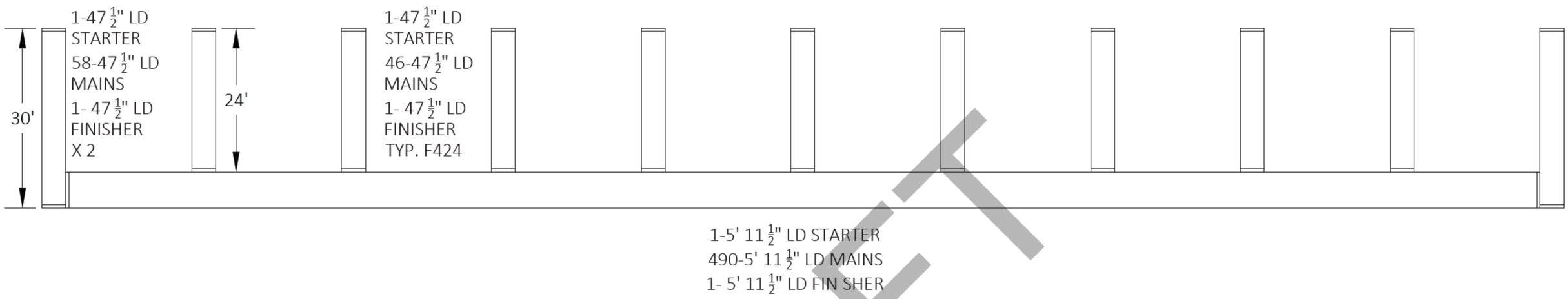


| DECKING CUT LIST | | |
|---|---|---|
| QTY. | DESCRIPTION | COLOR |
| 530 | 47-1/2" LOCKDRY MAINS | |
| 490 | 5' 11-1/2" LOCKDRY MAINS | |
| | | |
| 11 | 47-1/2" LOCKDRY STARTER | |
| 1 | 5' 11-1/2" LOCKDRY STARTER | |
| | | |
| 11 | 47-1/2" LOCKDRY FINISHER | |
| 1 | 5' 11-1/2" LOCKDRY FINISHER | |
| | | |
| | | |
| | | |
| | | |

DRAFT

D:\Pictures\LOGO\FLOTATION LOGO\FSI LOGO BW.JPG

—SHEET DETAIL—

FILE NAME/CUSTOMER → SHORES AT THE COMMON AREA.dwg

DRAWN: 6/1/2023

CHECKED:

MANAG.APPR:

ISSUED TO: MANUFACTURE

DESIGN DRAFTER: R.BAKER

FABRICATOR:

DECKING DIAGRAM

| SIZE | SCALE | DWG TYPE/NO. | REV |
|---|---|---|---|
| B | 1:180 | | 0 |

SHEET 14 OF 42

AUTOCAD .DWG

| CUT/STOCK LIST | | | | | | |
|---|---|---|---|---|---|---|
| DIE NUMBER | ITEM | QTY. | DESCRIPTION | FT. | IN. | TOTAL FT. |
| FH-07803 | A | 44 | 4"X4" POST | 10 | 2 | 447.3333 |
| FH-07803 | B | 22 | 4"X4" POST | 10 | 8-1/16 | 234.7813 |
| FH-07803 | C | 22 | 4"X4" POST | 11 | 2-3/16 | 246.0104 |
| FH-07803 | D | 22 | 4"X4" POST | 11 | 2 3/8 | 246.3542 |
| FH-07803 | E | 22 | 4"X4" POST | 10 | 8 1/4 | 235.1250 |

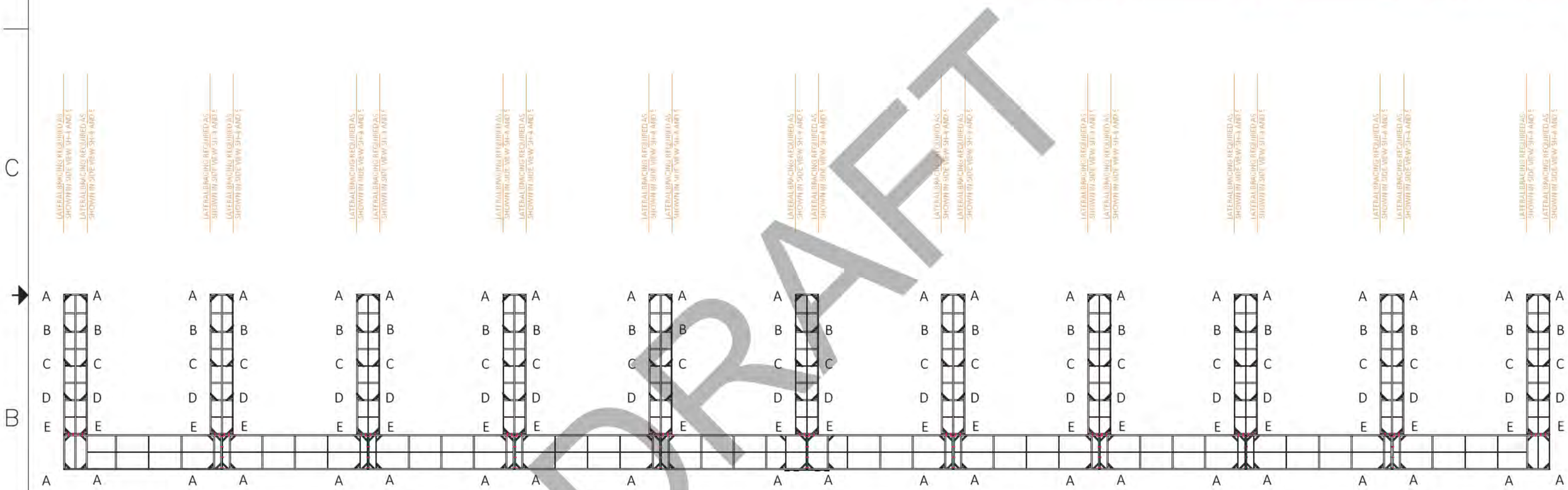


DRAFT

| | | |
|---|---|---|
| —SHEET DETAIL— | | |
| FILE NAME/CUSTOMER → | SHORES AT THE COMMON AREA.dwg | |
| DRAWN: 6/1/2023 | POST DIAGRAM | |
| CHECKED: | | |
| MANAG.APPR: | | |
| ISSUED TO: MANUFACTURE | | |
| DESIGN DRAFTER: R.BAKER | SIZE B / SCALE 1:180 | DWG TYPE/NO. / REV 0 |
| FABRICATOR: | | SHEET 15 OF 42 |

AUTOCAD .DWG

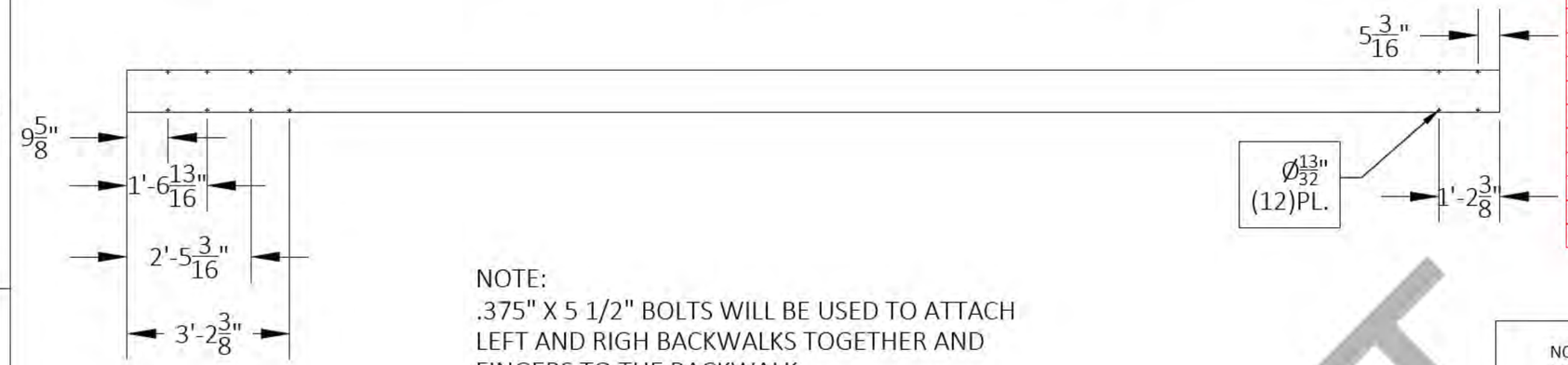


| CUT LIST | | | | | | | |
|---|---|---|---|---|---|---|---|
| DIE NUMBER | ITEM | QTY. | DESCRIPTION | DEGREE | FT | IN | TOTAL FT |
| FS-084499 | A | 2 | 10" H.W. | 45°-45° | 27 | 0" | 54.000000 |
| FS-084499 | B | 2 | 10" H.W. | 45°-45° | 6 | 0" | 12.000000 |
| FS-084499 | C | 1 | 10" H.W. | 0°-0° | 5 | 7 1/2" | ######## |
| FS-04306 | D | 4 | 8" L.W. | 0°-0° | 5 | 7 1/2" | ######### |
| FH-07805 | E | 3 | CORNER SLEEVE | 0°-0° | | 10" | 2.500000 |
| FH-00487 | F | 16 | 1"X2" GUSSET | 45°-45° | 1 | 9 13/16" | ######### |
| FH-01356 | G | 1 | 1/8" X 2" X 2" TUBE | 0°-0° | 22 | 9 3/4" | ######### |
| FH-01356 | H | 1 | 1/8" X 2" X 2" TUBE | 0°-0° | 5 | 7 1/2" | ######## |
| FS-04774 | I | 6 | 2" X 2" ANGLE | 0°-0° | | 2" | 1.000000 |

NOTE:
.375" X 5 1/2" BOLTS WILL BE USED TO ATTACH LEFT AND RIGH BACKWALKS TOGETHER AND FINGERS TO THE BACKWALK

NOTE:
USE .375 WELD OF APPROPRIATE TYPE PER SHOP STANDARD (TYP.) OR AS NOTED

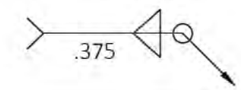


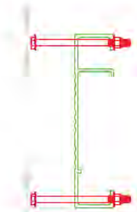

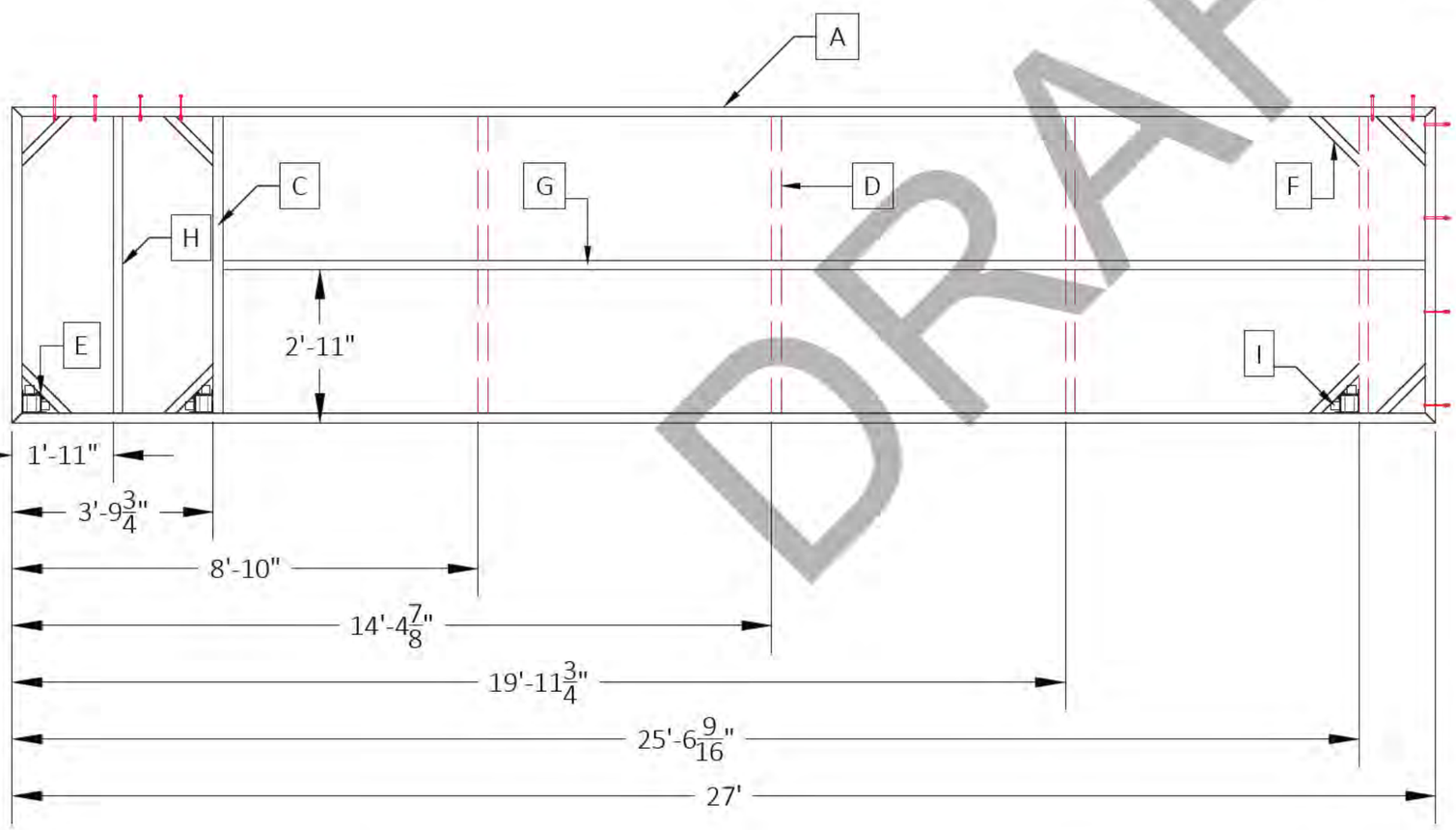


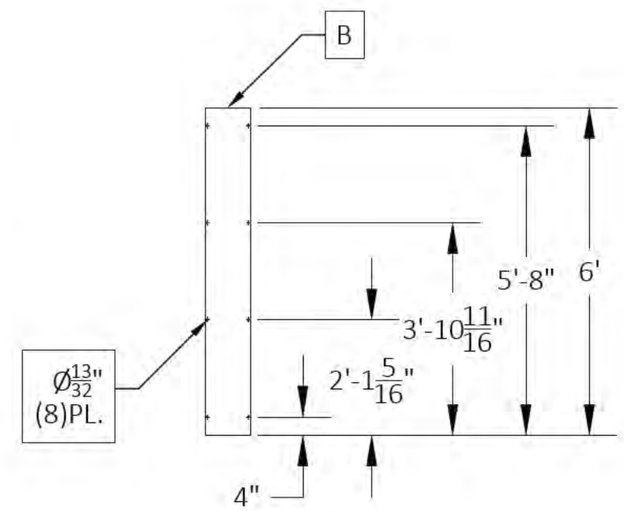


BW627L

(1)REQUIRED

DRAFT

| | | |
|---|---|---|
| —SHEET DETAIL— | | |
| FILE NAME/CUSTOMER → | SHORES AT THE COMMON AREA.dwg | |
| DRAWN: 6/1/2023 | BW627L | |
| CHECKED: | | |
| MANAG.APPR: | | |
| ISSUED TO: MANUFACTURE | | |
| DESIGN DRAFTER: R.BAKER | SIZE B / SCALE 1:34 | DWG TYPE/NO. / REV 0 |
| FABRICATOR: | | SHEET 16 OF 42 |

AUTOCAD .DWG

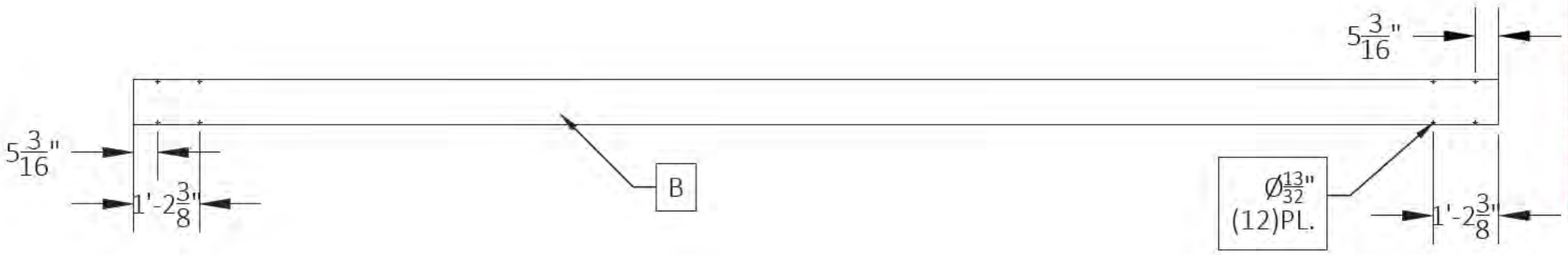


| CUT LIST | | | | | | | |
|---|---|---|---|---|---|---|---|
| DIE NUMBER | ITEM | QTY. | DESCRIPTION | DEGREE | FT | IN | TOTAL FT |
| FS-084499 | A | 2 | 10" H.W. | 45°-45° | 25 | 0" | 50.000000 |
| FS-084499 | B | 2 | 10" H.W. | 45°-45° | 6 | 0" | 12.000000 |
| FS-04306 | C | 5 | 8" L.W. | 0°-0° | 5 | 7 1/2" | ######### |
| FH-07805 | D | 2 | CORNER SLEEVE | 0°-0° | | 10" | 1.666667 |
| FH-00487 | E | 16 | 1"X2" GUSSET | 45°-45° | 1 | 9 13/16" | ######### |
| FH-01356 | F | 1 | 1/8" X 2" X 2" TUBE | 0°-0° | 24 | 7 1/2" | ######### |
| FS-04774 | G | 4 | 2" X 2" ANGLE | 0°-0° | | 2" | 0.666667 |

NOTE:
.375" X 5 1/2" BOLTS WILL BE USED TO ATTACH LEFT AND RIGH BACKWALKS TOGETHER AND FINGERS TO THE BACKWALK

NOTE:
USE .375 WELD OF APPROPRIATE TYPE PER SHOP STANDARD (TYP.) OR AS NOTED

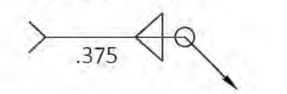


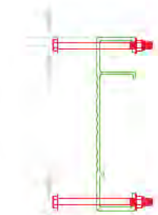

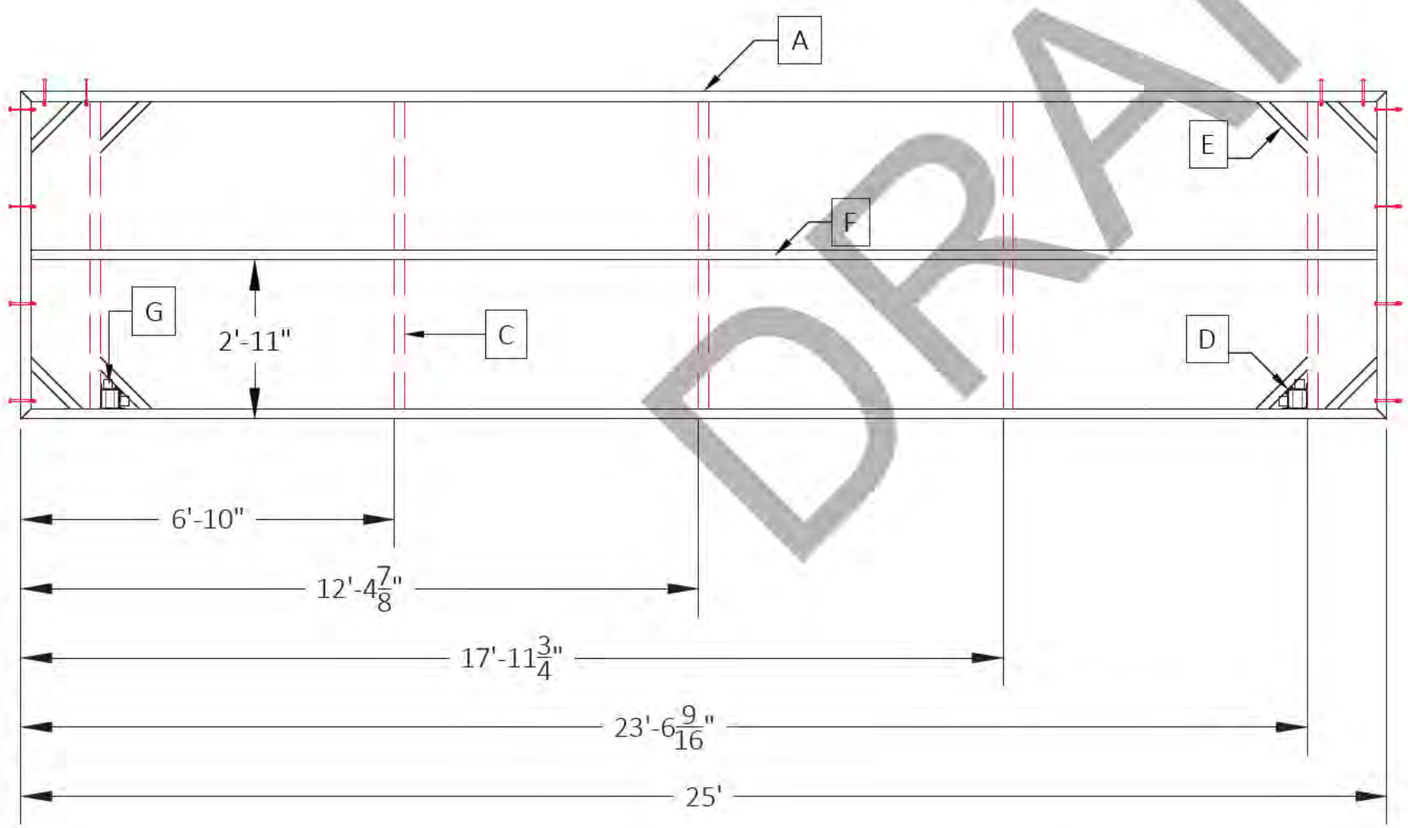


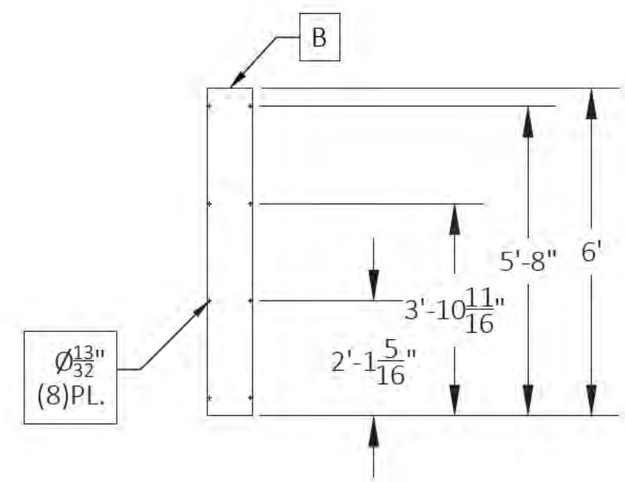


BW625

(6)REQUIRED

DRAFT

| | | |
|---|---|---|
| —SHEET DETAIL— | | |
| FILE NAME/CUSTOMER → | SHORES AT THE COMMON AREA.dwg | |
| DRAWN: 6/1/2023 | BW625 | |
| CHECKED: | | |
| MANAG.APPR: | | |
| ISSUED TO: MANUFACTURE | | |
| DESIGN DRAFTER: R.BAKER | SIZE B / SCALE 1:34 | DWG TYPE/NO. / REV 0 |
| FABRICATOR: | | SHEET 17 OF 42 |

AUTOCAD .DWG

| CUT LIST | | | | | | | |
|---|---|---|---|---|---|---|---|
| DIE NUMBER | ITEM | QTY | DESCRIPTION | DEGREE | FT | IN | TOTAL FT |
| FS-084499 | A | 2 | 10" H.W. | 45°-45° | 25 | 0" | 50.000000 |
| FS-084499 | B | 2 | 10" H.W. | 45°-45° | 6 | 0" | 12.000000 |
| FS-04306 | C | 5 | 8" L.W. | 0°-0° | 5 | 7 1/2" | ######### |
| FH-07805 | D | 2 | CORNER SLEEVE | 0°-0° | | 10" | 1.666667 |
| FH-00487 | E | 16 | 1"X2" GUSSET | 45°-45° | 1 | 9 13/16" | ######### |
| FH-01356 | F | 1 | 1/8" X 2" X 2" TUBE | 0°-0° | 24 | 7 1/2" | ######### |
| FS-04774 | G | 6 | 2" X 2" ANGLE | 0°-0° | | 2" | 1.000000 |

NOTE:
.375" X 5 1/2" BOLTS WILL BE USED TO ATTACH LEFT AND RIGHT BACKWALKS TOGETHER AND FINGERS TO THE BACKWALK

NOTE:
USE .375 WELD OF APPROPRIATE TYPE PER SHOP STANDARD (TYP.) OR AS NOTED

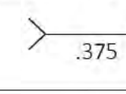

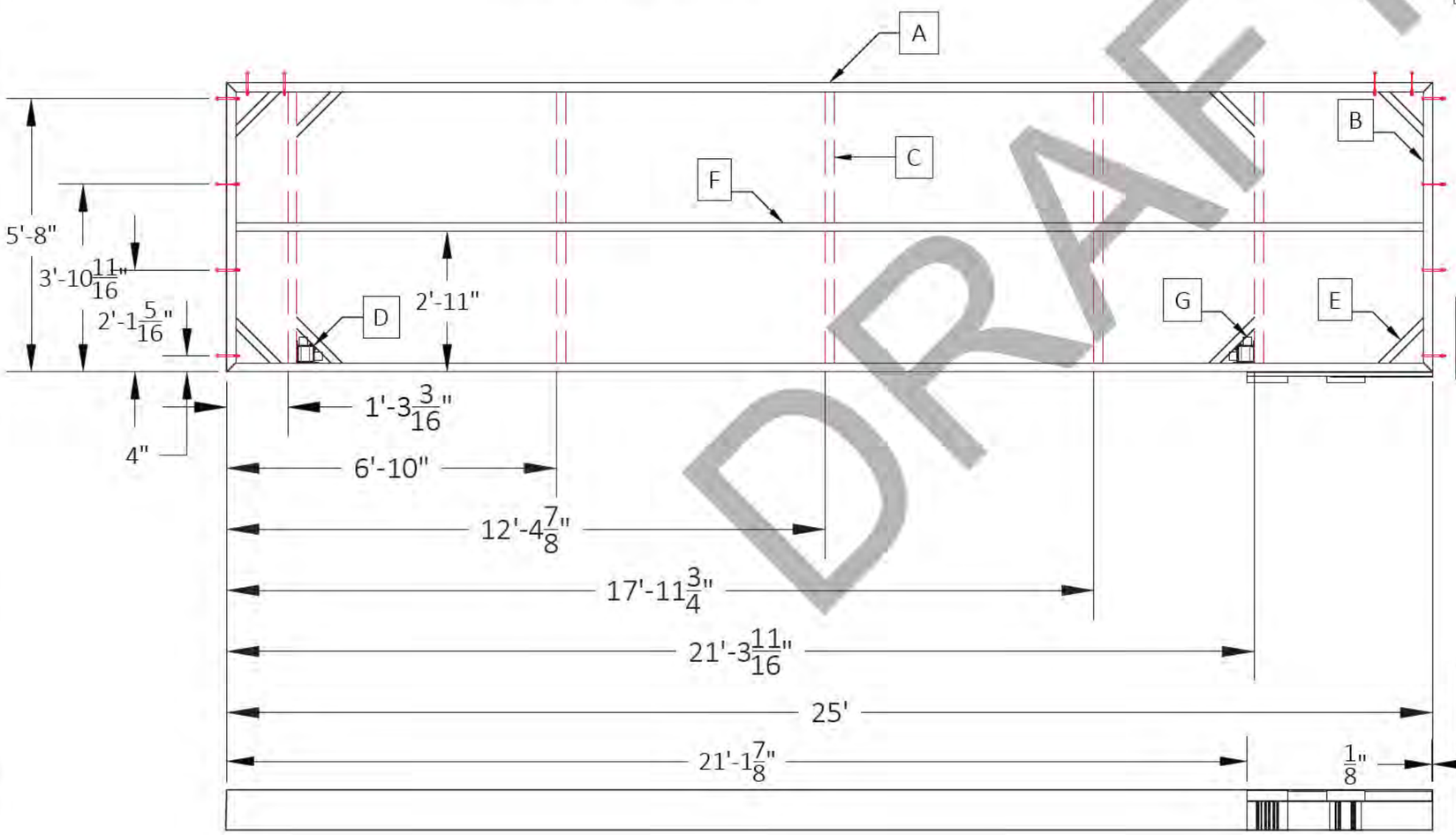


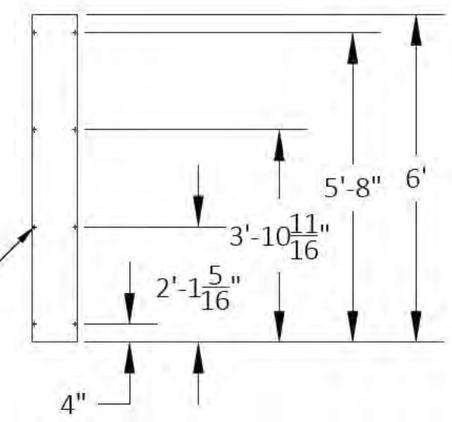


BW625L

(1)REQUIRED

DRAFT

| —SHEET DETAIL— | |
|---|---|
| FILE NAME/CUSTOMER → | SHORES AT THE COMMON AREA.dwg |
| DRAWN: 6/1/2023 | BW625L |
| CHECKED: | |
| MANAG.APPR: | |
| ISSUED TO: MANUFACTURE | |
| DESIGN DRAFTER: R.BAKER | SIZE B · SCALE 1:34 · DWG TYPE/NO. · REV 0 |
| FABRICATOR: | SHEET 18 OF 42 |

AUTOCAD .DWG

| CUT LIST | | | | | | | |
|---|---|---|---|---|---|---|---|
| DIE NUMBER | ITEM | QTY | DESCRIPTION | DEGREE | FT | IN | TOTAL FT |
| FS-084499 | A | 2 | 10" H.W. | 45°-45° | 25 | 0" | 50.000000 |
| FS-084499 | B | 2 | 10" H.W. | 45°-45° | 6 | 0" | 12.000000 |
| FS-04306 | C | 5 | 8" L.W. | 0°-0° | 5 | 7 1/2" | ######### |
| FH-07805 | D | 2 | CORNER SLEEVE | 0°-0° | | 10" | 1.666667 |
| FH-00487 | E | 16 | 1"X2" GUSSET | 45°-45° | 1 | 9 13/16" | ######### |
| FH-01356 | F | 1 | 1/8" X 2" X 2" TUBE | 0°-0° | 24 | 7 1/2" | ######### |
| FS-04774 | G | 6 | 2" X 2" ANGLE | 0°-0° | | 2" | 1.000000 |

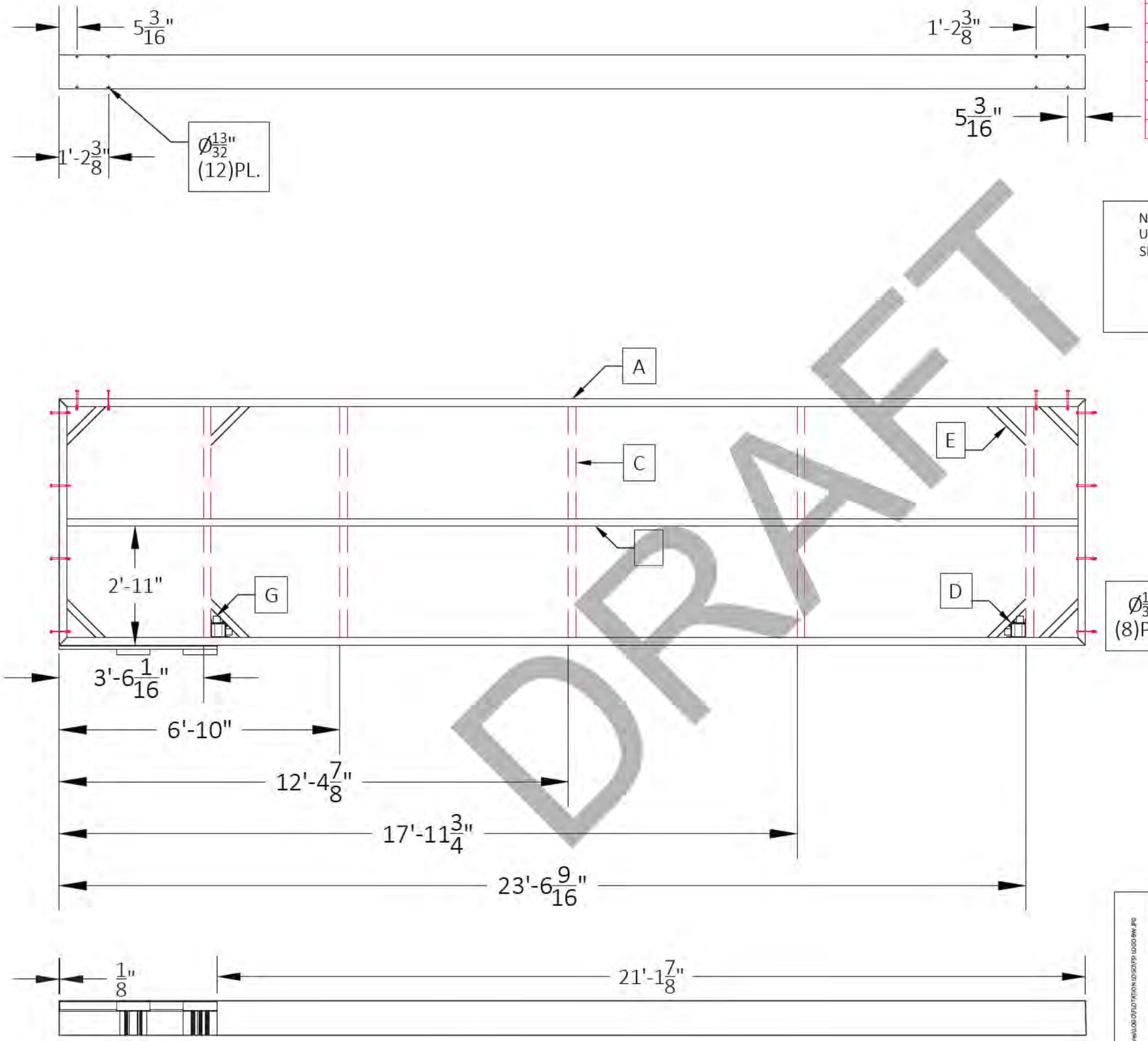


NOTE:
USE .375 WELD OF APPROPRIATE TYPE PER SHOP STANDARD (TYP.) OR AS NOTED

.375

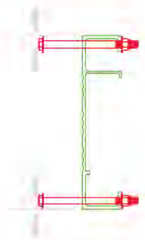

BW625L

(1)REQUIRED

DRAFT

| | | |
|---|---|---|
| —SHEET DETAIL— | | |
| FILE NAME/CUSTOMER → | SHORES AT THE COMMON AREA.dwg | |
| DRAWN: 6/1/2023 | BW625R | |
| CHECKED: | | |
| MANAG.APPR: | | |
| ISSUED TO: MANUFACTURE | | |
| DESIGN DRAFTER: R.BAKER | SIZE B / SCALE 1:34 | DWG TYPE/NO. / REV 0 |
| FABRICATOR: | | SHEET 18 OF 42 |

AUTOCAD .DWG

| CUT LIST | | | | | | | |
|---|---|---|---|---|---|---|---|
| DIE NUMBER | ITEM | QTY. | DESCRIPTION | DEGREE | FT | IN | TOTAL FT |
| FH-07812 | A | 2 | RAMP PIPE | 0°-0° | | 10" | 1.67 |
| FH-07812 | B | 2 | RAMP PIPE | 0°-0° | | 9 9/16" | #### |
| FS-07813 | C | 1 | PAMP TRACK | 0°-0° | 3 | 10" | 3.83 |
| FS-08499 | D | 2 | 10" H.W. | 0°-0° | | 7" | 1.17 |
| FS-00431 | E | 2 | 8" H.W. | 0°-0° | | 7" | 1.17 |

*MEASUREMENTS MUST BE EXACT!

WELD THE RAMP TRACK TO THE FRAME!!

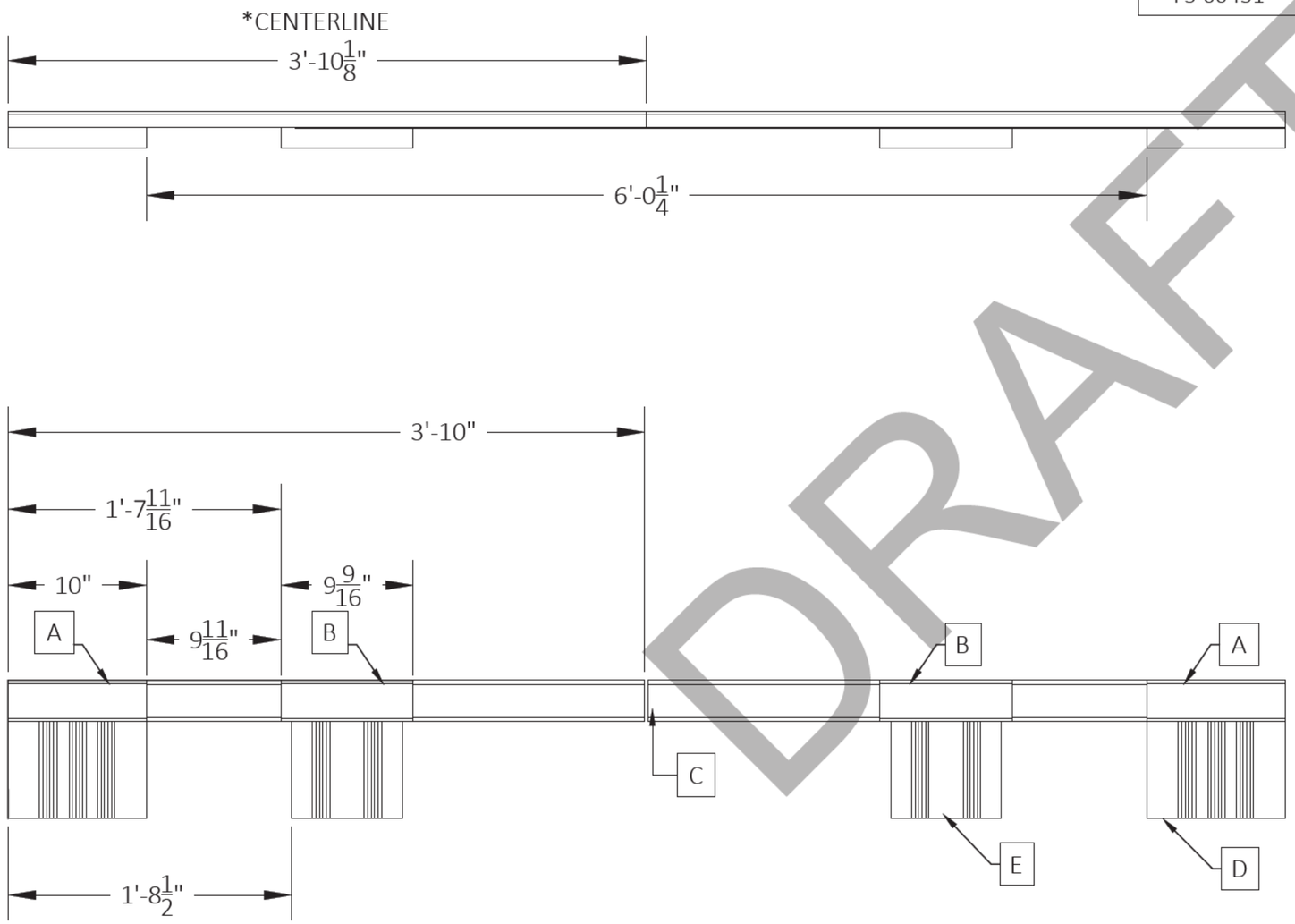


NOTE:
USE .375 WELD OF APPROPRIATE TYPE PER SHOP STANDARD (TYP.) OR AS NOTED

DRAFT

| | | |
|---|---|---|
| —SHEET DETAIL— | | |
| FILE NAME/CUSTOMER | SHORES AT THE COMMON AREA.dwg | |
| DRAWN: 6/1/2023 | RA-1 | |
| CHECKED: | | |
| MANAG.APPR: | | |
| ISSUED TO: MANUFACTURE | | |
| DESIGN DRAFTER: R.BAKER | SIZE B / SCALE 1:10 | DWG TYPE/NO. / REV 0 |
| FABRICATOR: | | SHEET 19 OF 42 |

D:\Pictures\LOGO\FLOTATION LOGO\FS LOGO BW.JPG

AUTOCAD .DWG

## CUT/STOCK LIST

| DIE NUMBER | ITEM | QTY. | DESCRIPTION | DEGREE | FT. | IN. | TOTAL FT. |
|---|---|---|---|---|---|---|---|
| FS-084499 | A | 2 | 10" H.W. | 45°-45° | 24 | 0" | 48.00 |
| FS-084499 | B | 2 | 10" H.W. | 45°-45° | 4 | 0" | 8.00 |
| FS-04306 | C | 7 | 8" L.W. | 0°-0° | 3 | 7 1/2" | ##### |
| FH-07805 | D | 10 | CORNER SLEEVE | 0°-0° | | 10" | 8.33 |
| FH-00487 | E | 20 | 1"X2" GUSSET | 45°-45° | 1 | 9 13/16" | ##### |
| FH-01356 | F | 1 | 1/8" X 2" X 2" TUBE | 0°-0° | 23 | 7 1/2" | ##### |
| FS-04774 | G | 20 | 2" X 2" ANGLE | 0°-0° | | 2" | 3.33 |

HOLE PLACEMENT 1/2" INCH FROM CHANNEL EDGE ON TAB

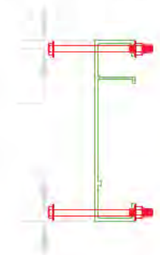

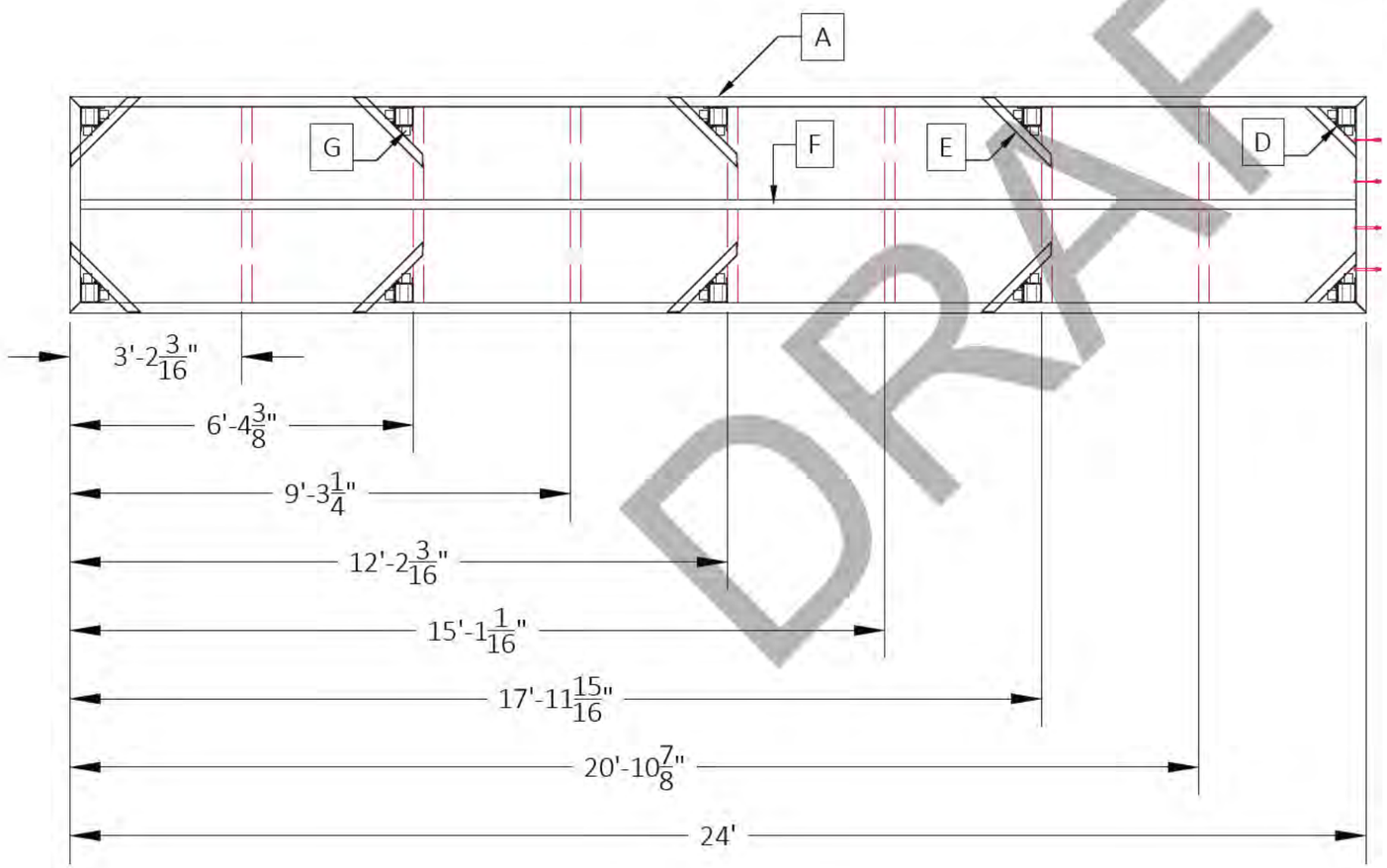


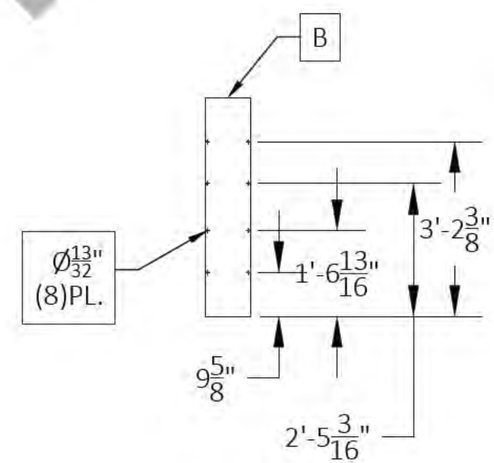


F424

(11)REQUIRED

DRAFT

| | | |
|---|---|---|
| —SHEET DETAIL— | | |
| FILE NAME/CUSTOMER → | SHORES AT THE COMMON AREA.dwg | |
| DRAWN: 6/1/2023 | | |
| CHECKED: | F424 | |
| MANAG.APPR: | | |
| ISSUED TO: MANUFACTURE | | |
| DESIGN DRAFTER: R.BAKER | SIZE B / SCALE 1:34 | DWG TYPE/NO. / REV 0 |
| FABRICATOR: | | SHEET 20 OF 42 |

AUTOCAD .DWG

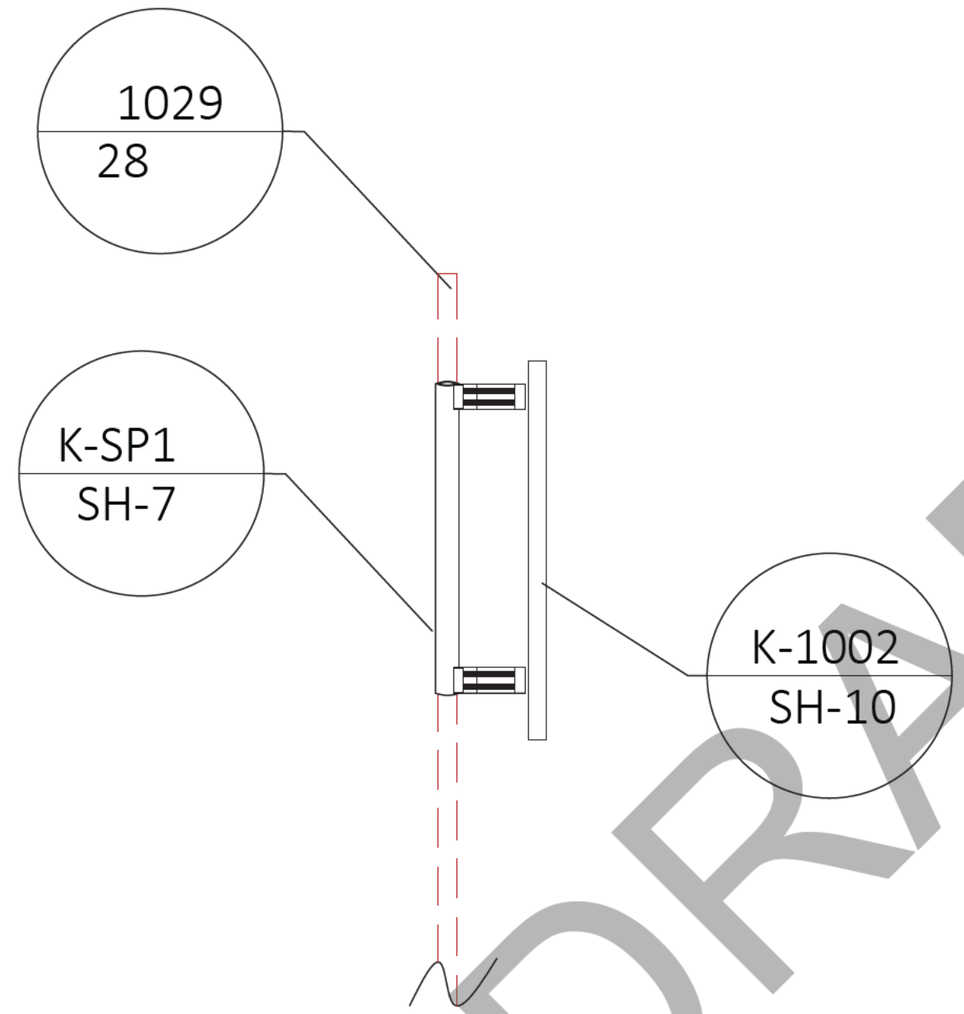


INSERT STUB-UP MATERIAL AS SHOWN IN POST TO WHICH SPUD POLE SLEEVES ATTACH. FASTEN USING A DRILLET TO HOLD IN PLACE DURING INSTALLATION.
SEE SH-3C F R SLEEVE LOCATION

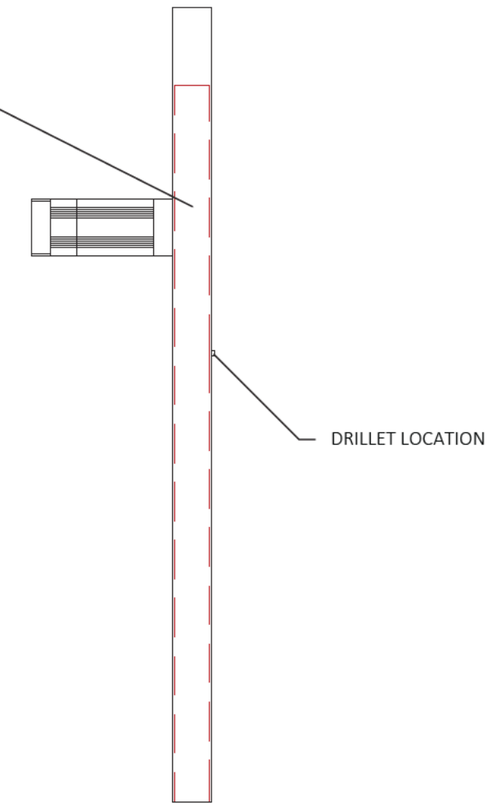


FLUSH WITH THE BOTTOM OF THE POST

DRAFT

K-SP1 ASSEMBLIES ARE TO BE BOLTED TO THE FRAMES AND POST AT THE SPECIFICALLY MARKED PLACES.

| | | |
|---|---|---|
| —SHEET DETAIL— | | |
| FILE NAME/CUSTOMER → | SHORES AT THE COMMON AREA.dwg | |
| DRAWN: 6/1/2023 | 8' COLLAR SIDE VIEW | |
| CHECKED: | | |
| MANAG.APPR: | | |
| ISSUED TO: MANUFACTURE | | |
| DESIGN DRAFTER: R.BAKER | SIZE B / SCALE 1:36 | DWG TYPE/NO. / REV 0 |
| FABRICATOR: | | SHEET 21 OF 42 |

D:\Pictures\LOGO\FLOTATION LOGO\FSI LOGO BW.JPG

AUTOCAD .DWG

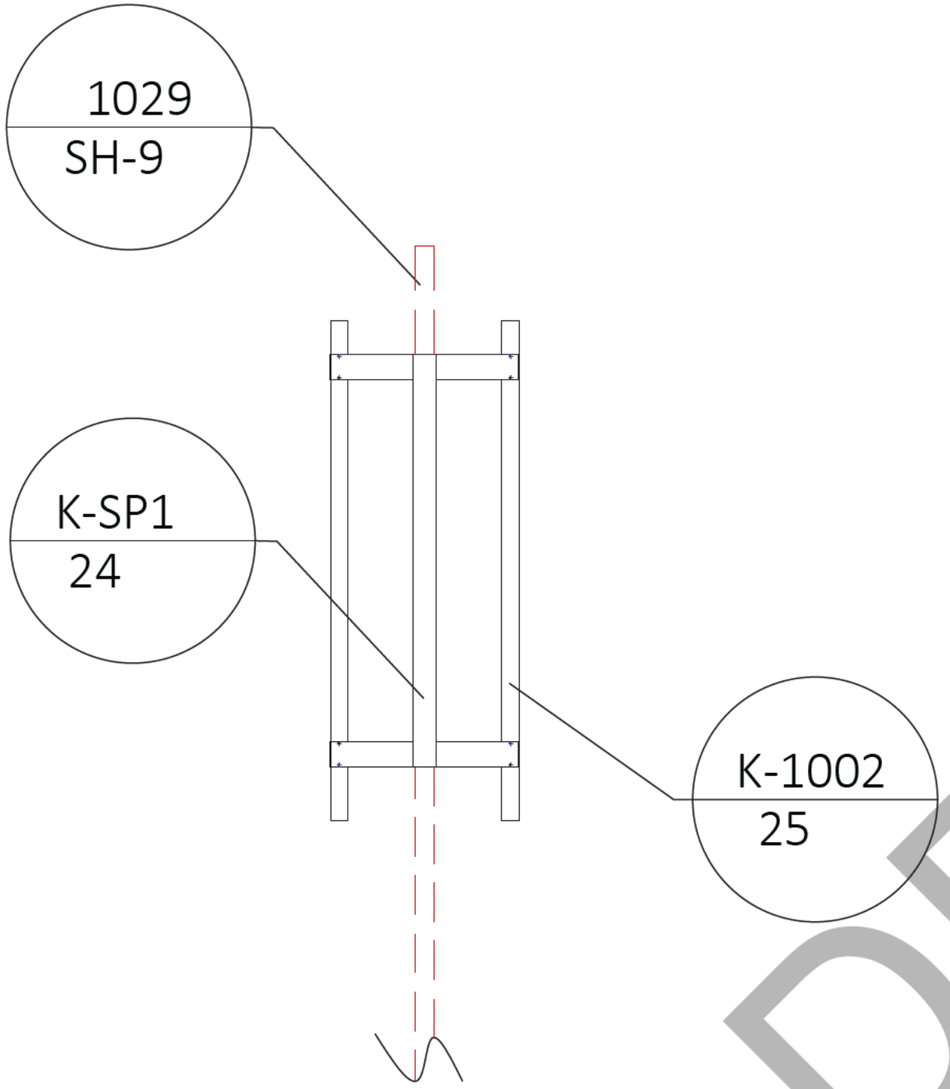


INSERT STUB-UP MATERIAL AS SHOWN IN POST TO WHICH SPUD POLE SLEEVES ATTACH. FASTEN USING A DRILLET TO HOLD IN PLACE DURING INSTALLATION.
SEE SH-3C FOR SLEEVE LOCATION

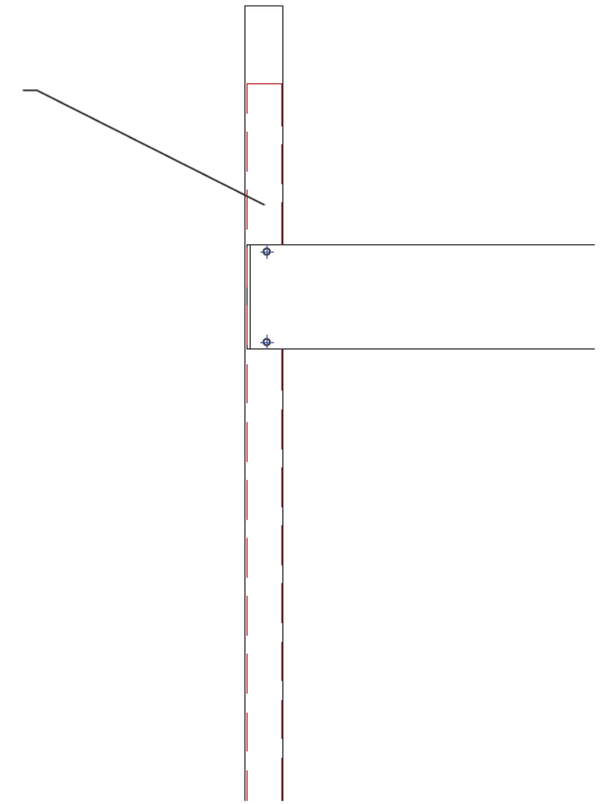

FLUSH WITH THE BOTTOM OF THE POST

DRAFT

K-SP1 ASSEMBLIES ARE TO BE BOLTED TO THE FRAMES AND POST AT THE SPECIFICALLY MARKED PLACES.

| | | |
|---|---|---|
| D:\Pictures\LOGO\FLOTATION LOGO\FSI LOGO BW.JPG | —SHEET DETAIL— | |
| | FILE NAME/CUSTOMER → | SHORES AT THE COMMON AREA.dwg |
| | DRAWN: 6/1/2023 | 8' COLLAR FRONT VIEW |
| | CHECKED: | |
| | MANAG.APPR: | |
| | ISSUED TO: MANUFACTURE | |
| | DESIGN DRAFTER: R.BAKER | SIZE B / SCALE 1:36 / DWG TYPE/NO. / REV 0 |
| | FABRICATOR: | SHEET 22 OF 42 |

AUTOCAD .DWG

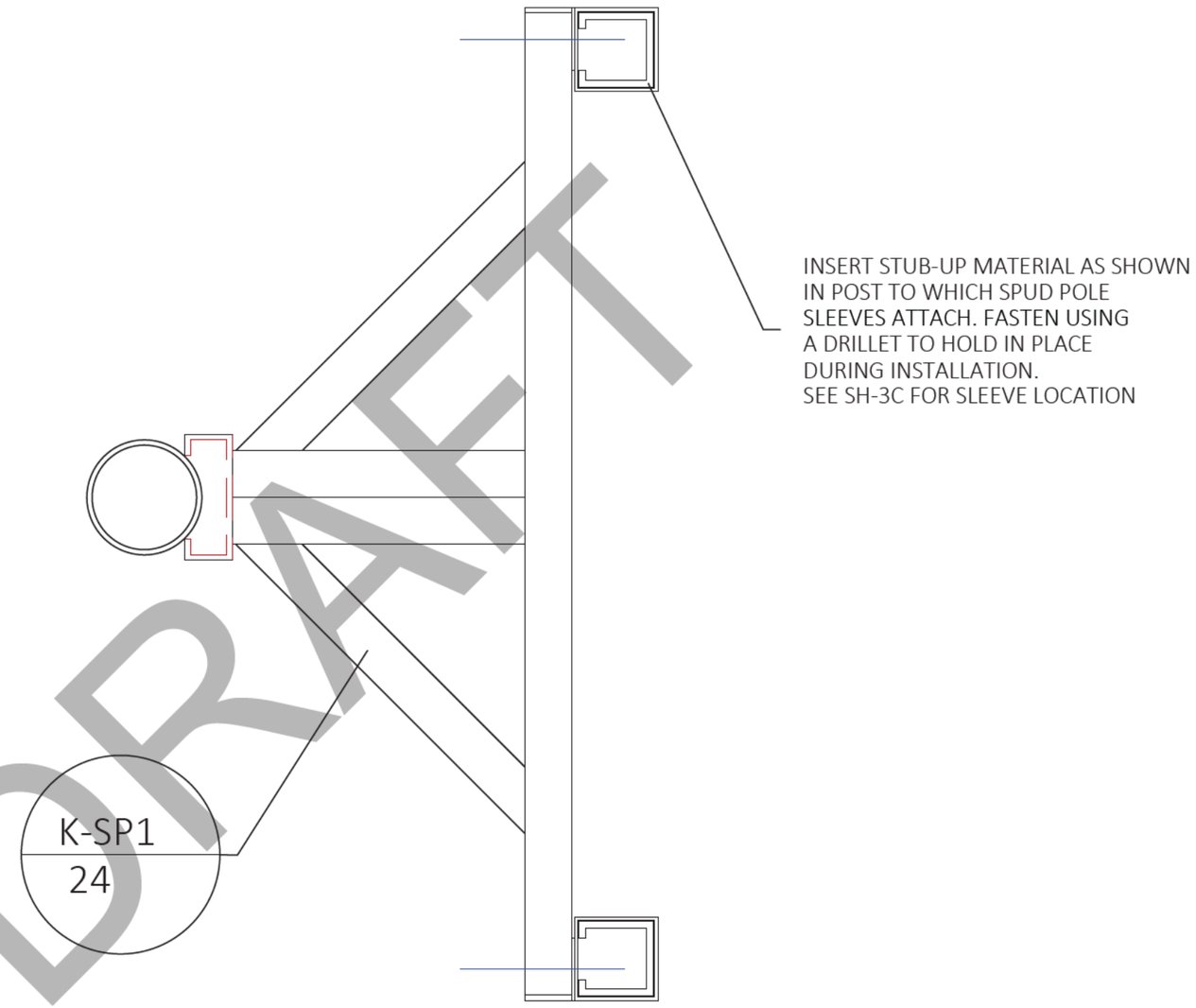


DRAFT

K-SP1 ASSEMBLIES ARE TO BE BOLTED TO THE FRAMES AND POST AT THE SPECIFICALLY MARKED PLACES.

| | | |
|---|---|---|
| —SHEET DETAIL— | | |
| FILE NAME/CUSTOMER | SHORES AT THE COMMON AREA.dwg | |
| DRAWN: 6/1/2023 | 8' COLLAR TOP VIEW | |
| CHECKED: | | |
| MANAG.APPR: | | |
| ISSUED TO: MANUFACTURE | | |
| DESIGN DRAFTER: R.BAKER | SIZE B / SCALE 1:42 | DWG TYPE/NO. / REV 0 |
| FABRICATOR: | | SHEET 23 OF 42 |

D:\Pictures\LOGO\FLOTATION LOGO\FSI LOGO BW.JPG

AUTOCAD .DWG

| CUT/STOCK LIST | | | | | | | |
|---|---|---|---|---|---|---|---|
| DIE NUMBER | ITEM | QTY. | DESCRIPTION | DEGREE | FT. | IN. | TOTAL FT. |
| FH-04827 | A | 1 | 5" SCH. 40 ALUM PIPE | 0°-0° | 8 | 2" | 8.17 |
| FS-04739 | B | 2 | 6" H.W. | 0°-0° | | 5 1/2" | #### |
| FS-00490 | C | 4 | $\frac{1}{4}$" X 2 $\frac{1}{4}$" PRE-CUT PLATE | 0°-0° | | 6" | 2.00 |
| FS-04739 | D | 4 | 6" H.W. | 0°-0° | 1 | 10" | 7.33 |
| FS-04739 | E | 2 | 6" H.W. | 0°-0° | 3 | 6 5/8" | #### |
| FS-04739 | F | 4 | 6" H.W. | 45°-45° | 1 | 7 1/2" | #### |
| FS-00678 | G | 4 | $\frac{1}{4}$" X 6" FLAT PLATE | 0°-0° | | 2 1/4" | #### |

SIDE VIEW

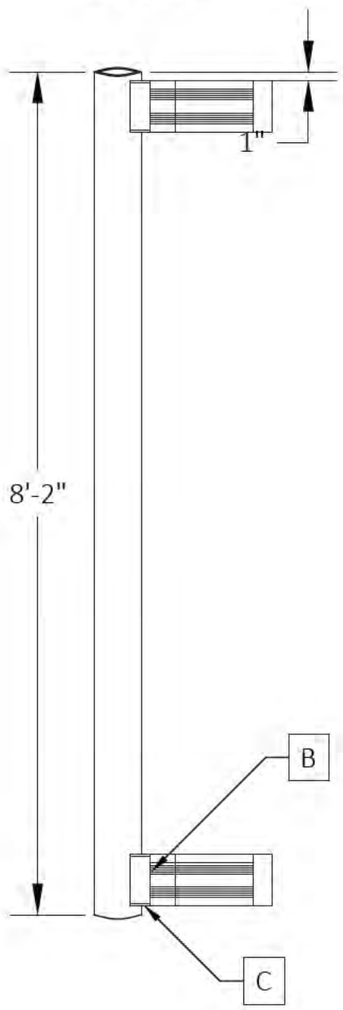


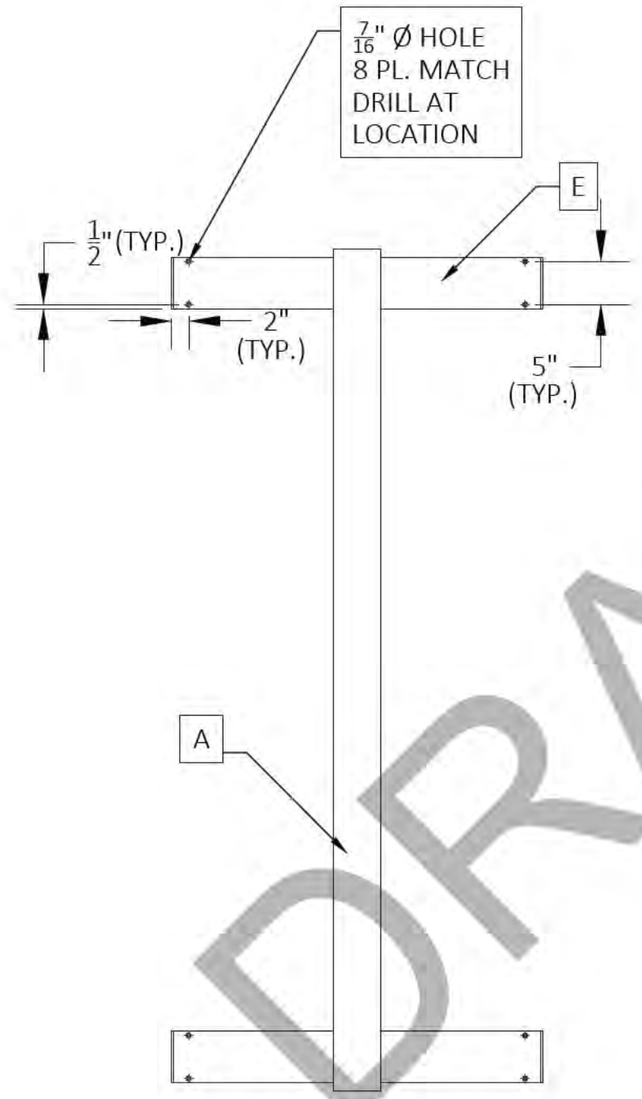


FRONT VIEW

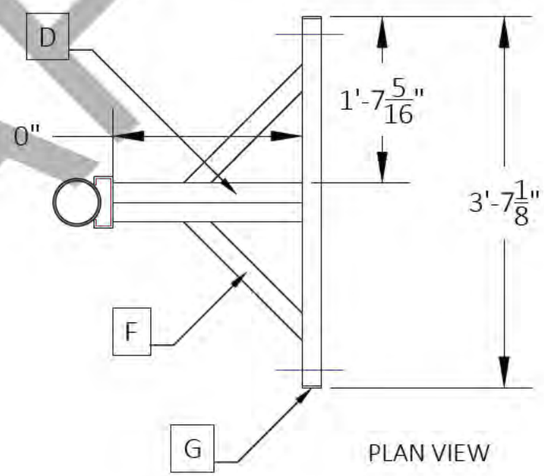


PLAN VIEW

K-SP1

(21)REQUIRED

K-SP1 ASSEMBLIES ARE TO BE BOLTED TO THE FRAMES AND POST AT THE SPECIFICALLY MARKED PLACES.

DRAFT

| | | | | |
|---|---|---|---|---|
| D:\Pictures\LOGO\FLOTATION LOGOS\FS LOGO BW.JPG | —SHEET DETAIL— | SHORES AT THE COMMON AREA.dwg | | |
| | FILE NAME/CUSTOMER → | | | |
| | DRAWN: 6/1/2023 | K-SP1 | | |
| | CHECKED: | | | |
| | MANAG.APPR: | | | |
| | ISSUED TO: MANUFACTURE | | | |
| | DESIGN DRAFTER: R.BAKER | SIZE B / SCALE 1:18 | DWG TYPE/NO. | REV 0 |
| | FABRICATOR: | | | SHEET 24 OF 42 |

AUTOCAD .DWG

## CUT/STOCK LIST

| DIE NUMBER | ITEM | QTY. | DESCRIPTION | DEGREE | FT. | IN. | TOTAL FT. |
|---|---|---|---|---|---|---|---|
| FH-07908 | A | 44 | 4" STUP UP | 0°-0° | 7 | 4 | 322.6667 |

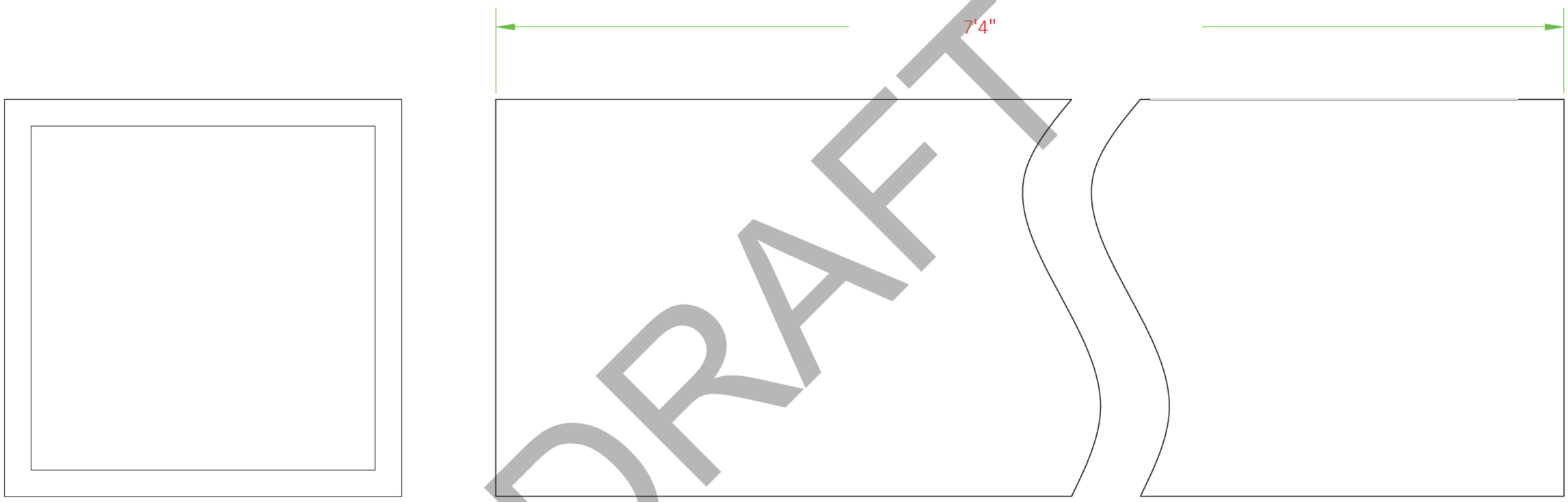


DRAFT

K-1002

| | | |
|---|---|---|
| —SHEET DETAIL— | | |
| FILE NAME/CUSTOMER ➔ | SHORES AT THE COMMON AREA.dwg | |
| DRAWN: 6/1/2023 | K-1002 | |
| CHECKED: | | |
| MANAG.APPR: | | |
| ISSUED TO: MANUFACTURE | | |
| DESIGN DRAFTER: R.BAKER | SIZE B / SCALE 1:1 | DWG TYPE/NO. / REV 0 |
| FABRICATOR: | | SHEET 25 OF 42 |

D:\Pictures\LOGO\FLOTATION LOGO\FSI LOGO BW.JPG

AUTOCAD .DWG

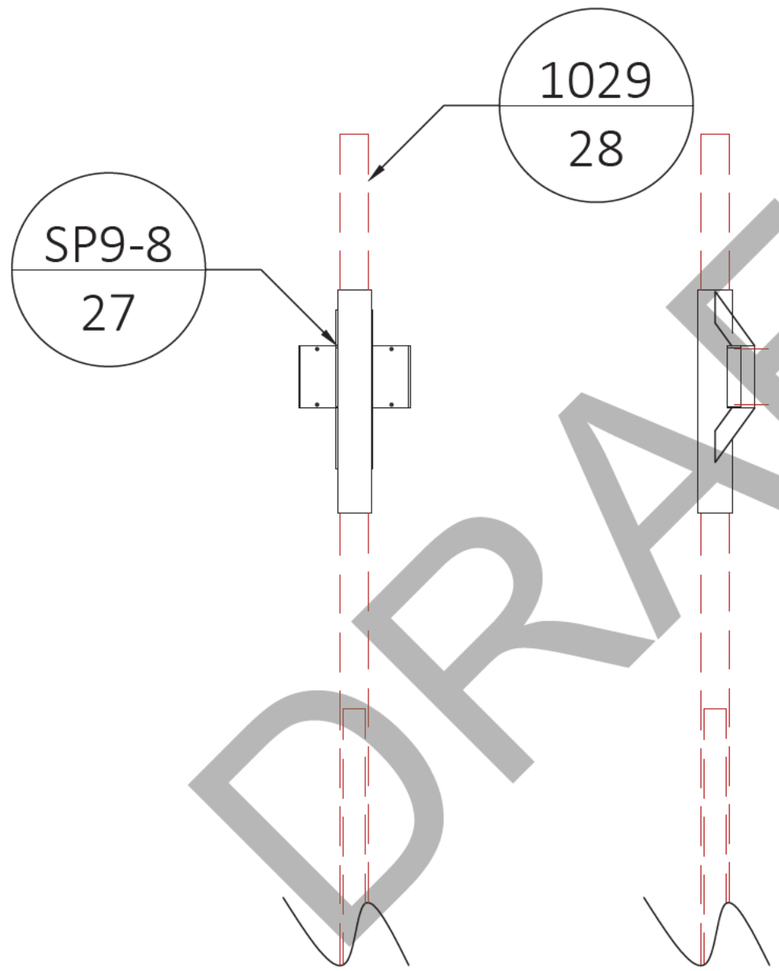


DRAFT

| | |
|---|---|
| —SHEET DETAIL— | |
| FILE NAME/CUSTOMER → | SHORES AT THE COMMON AREA.dwg |
| DRAWN: 6/1/2023 | 3' SPUD POLE COLLAR<br>TOP AND SIDE VIEW |
| CHECKED: | |
| MANAG.APPR: | |
| ISSUED TO: MANUFACTURE | |
| DESIGN DRAFTER: R.BAKER | SIZE B · SCALE 1:25 · DWG TYPE/NO. · REV 0 |
| FABRICATOR: | SHEET 26 OF 42 |

D:\Pictures\LOGO\FLOTATION LOGO\FSI LOGO BW.JPG

AUTOCAD .DWG

| CUT/STOCK LIST | | | | | | | |
|---|---|---|---|---|---|---|---|
| DIE NUMBER | ITEM | QTY. | DESCRIPTION | DEGREE | FT. | IN. | TOTAL FT. |
| FH-04827 | A | 2 | 5" SCH. 40 ALUM PIPE | 0°-0° | 3 | 0 | 6.00 |
| FS08499 | B | 2 | 10" H.W. | 0°-0° | 1 | 5 1/2" | #### |
| FS-04739 | C | 2 | 6" H.W. | 0°-0° | | 9 1/2" | #### |
| FS-01990 | D | 4 | $\frac{1}{4}$" X 8" FLATPLATE | 0°-0° | | 2 1/4" | #### |
| FS-00678 | E | 4 | $\frac{1}{4}$" X6" FLATPLATE | 0°-0° | | 2 1/4" | #### |
| FS-04457 | F | 8 | $\frac{3}{8}$" X 2 $\frac{1}{4}$" FLATPLATE | L54°-L36° | | 10 7/8" | #### |

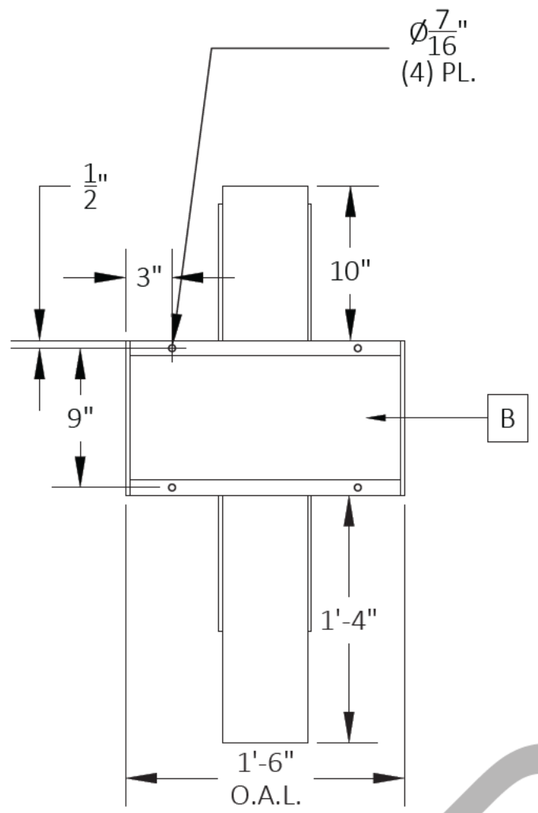


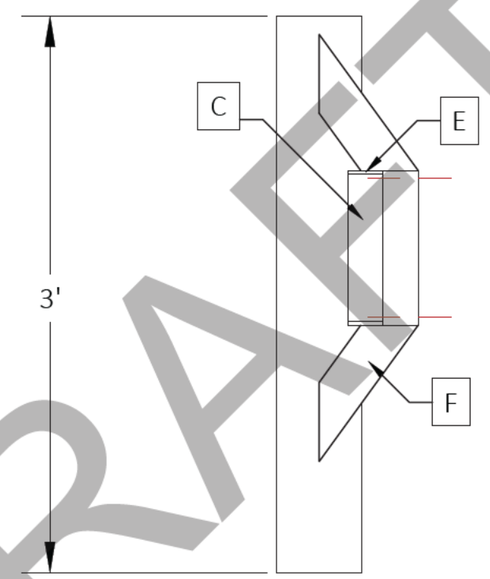


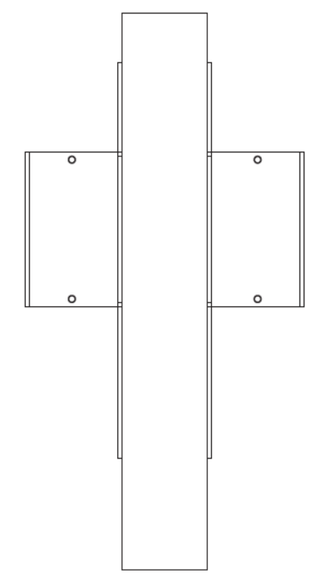

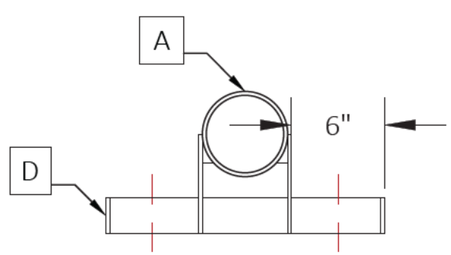


SP9–8

(2)REQUIRED

DRAFT

D:\Pictures\LOGO\FLOTATION LOGO\FSI LOGO BW.JPG

| –SHEET DETAIL– | | | |
|---|---|---|---|
| FILE NAME/CUSTOMER → | SHORES AT THE COMMON AREA.dwg | | |
| DRAWN: 6/1/2023 | SP9-8 | | |
| CHECKED: | | | |
| MANAG.APPR: | | | |
| ISSUED TO: MANUFACTURE | | | |
| DESIGN DRAFTER: R.BAKER | SIZE B | SCALE 1:10 | DWG TYPE/NO. | REV 0 |
| FABRICATOR: | | | SHEET 27 OF 42 |

AUTOCAD .DWG

| CUT/STOCK LIST | | | | | | | |
|---|---|---|---|---|---|---|---|
| DIE NUMBER | ITEM | QTY. | DESCRIPTION | DEGREE | FT. | IN. | TOTAL FT. |
| | A | 23 | 4" SCH 40 X 21' SPUD POLE | | 21 | 0 | 483.0000 |

DRAFT

1029

| | | |
|---|---|---|
| —SHEET DETAIL— | | |
| FILE NAME/CUSTOMER → | SHORES AT THE COMMON AREA.dwg | |
| DRAWN: 6/1/2023 | 1029 | |
| CHECKED: | | |
| MANAG.APPR: | | |
| ISSUED TO: MANUFACTURE | | |
| DESIGN DRAFTER: R.BAKER | SIZE B / SCALE 1:18 | DWG TYPE/NO. / REV 0 |
| FABRICATOR: | | SHEET 28 OF 42 |

D:\Pictures\LOGO\FLOTATION LOGO\FSI LOGO BW.JPG

AUTOCAD .DWG

| CUT/STOCK LIST | | | | | | | |
|---|---|---|---|---|---|---|---|
| DIE NUMBER | ITEM | QTY. | DESCRIPTION | DEGREE | FT. | IN. | TOTAL FT. |
| FH-01356 | A | 1 | 1/8" X 2" X 2" TUBE | 0°-0° | 20 | 8 7/8 | 20.739583 |
| FH-01356 | B | 4 | 1/8" X 2" X 2" TUBE | 0°-0° | 4 | 8 3/4 | 18.916667 |
| FH-01356 | C | 5 | 1/8" X 2" X 2" TUBE | 0°-0° | 4 | 3 | 21.250000 |
| FH-01 56 | D | 2 | 1/8" X 2" X 2" TUBE | 45°-45° | 1 | 11 | 3.833333 |
| F 356 | E | 2 | 1/8" X 2" X 2" TUBE | 0°-45° | | 6 | 1.000000 |

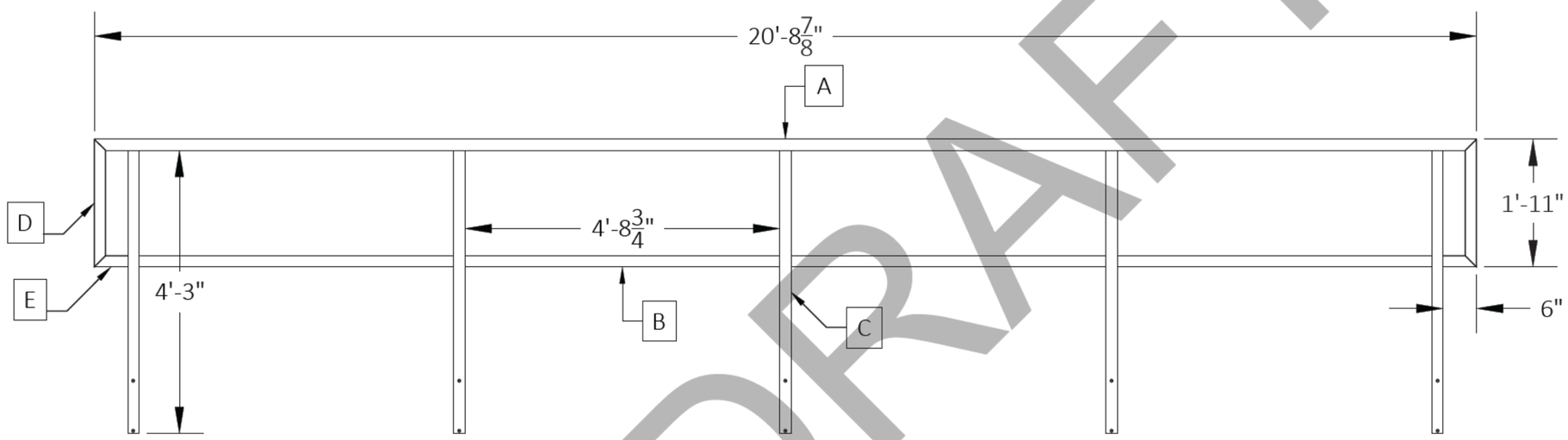


DRAFT

SP1

(8)REQUIRED

| | | |
|---|---|---|
| D:\Pictures\LOGO\FLOTATION LOGO\FPI LOGO BW.JPG | —SHEET DETAIL— | |
| | FILE NAME/CUSTOMER → | SHORES AT THE COMMON AREA.dwg |
| | DRAWN: 6/1/2023 | |
| | CHECKED: | SP-1 |
| | MANAG.APPR: | |
| | ISSUED TO: MANUFACTURE | |
| | DESIGN DRAFTER: R.BAKER | SIZE B / SCALE 1:24 / DWG TYPE/NO. / REV 0 |
| | FABRICATOR: | SHEET 29 OF 42 |

AUTOCAD .DWG

## CUT/STOCK LIST

| DIE NUMBER | ITEM | QTY. | DESCRIPTION | DEGREE | FT. | IN. | TOTAL FT. |
|---|---|---|---|---|---|---|---|
| FH-01356 | A | 1 | 1/8" X 2" X 2" TUBE | 0°-0° | 18 | 9 15/16 | 18.828125 |
| FH-01356 | B | 3 | 1/8" X 2" X 2" TUBE | 0°-0° | 5 | 8 | 17.000000 |
| FH-01356 | C | 4 | 1/8" X 2" X 2" TUBE | 0°-0° | 4 | 3 | 17.000000 |
| FH-01356 | D | 2 | 1/8" X 2" X 2" TUBE | 45°-45° | 1 | 11 | 3.833333 |
| FH-01356 | E | 2 | 1/8" X 2" X 2" TUBE | 0°-45° | | 7 | 1.166667 |

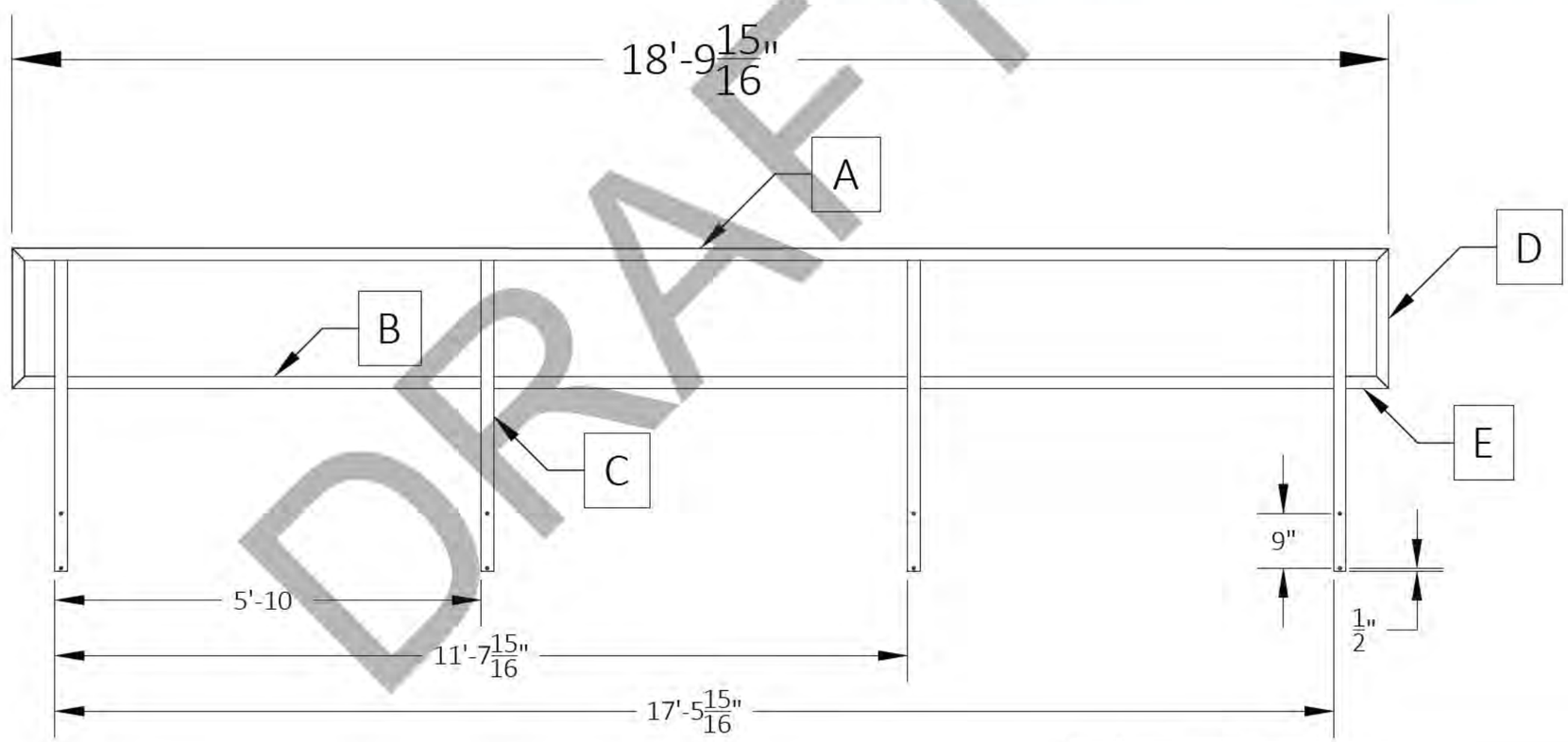


SP2

(2)REQUIRED

DRAFT

| | | |
|---|---|---|
| —SHEET DETAIL— | | |
| FILE NAME/CUSTOMER → | SHORES AT THE COMMON AREA.dwg | |
| DRAWN: 6/1/2023 | SP-2 | |
| CHECKED: | | |
| MANAG.APPR: | | |
| ISSUED TO: MANUFACTURE | | |
| DESIGN DRAFTER: R.BAKER | SIZE B / SCALE 1:24 | DWG TYPE/NO. / REV 0 |
| FABRICATOR: | | SHEET 30 OF 42 |

D:\Pictures\LOGO\QUOTATION LOGO\PS LOGO.BMP

AUTOCAD .DWG

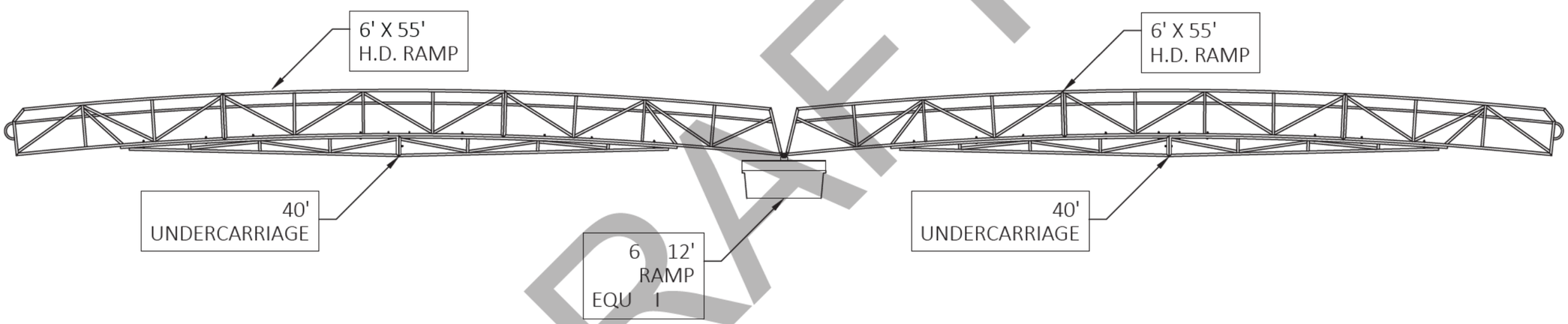


DRAFT

| | |
|---|---|
| —SHEET DETAIL— | |
| FILE NAME/CUSTOMER ➔ | SHORES AT THE COMMON AREA.dwg |
| DRAWN: 6/1/2023 | (2) 6' X 55' RAMPS W/ EQUALIZER SIDE VIEW |
| CHECKED: | |
| MANAG.APPR: | |
| ISSUED TO: MANUFACTURE | |
| DESIGN DRAFTER: R.BAKER | SIZE B · SCALE 1:100 · DWG TYPE/NO. · REV 0 |
| FABRICATOR: | SHEET 31 OF 42 |

D:\Pictures\LOGO\FULLOTATION LOGO\FS1 LOGO BW.JPG

AUTOCAD .DWG

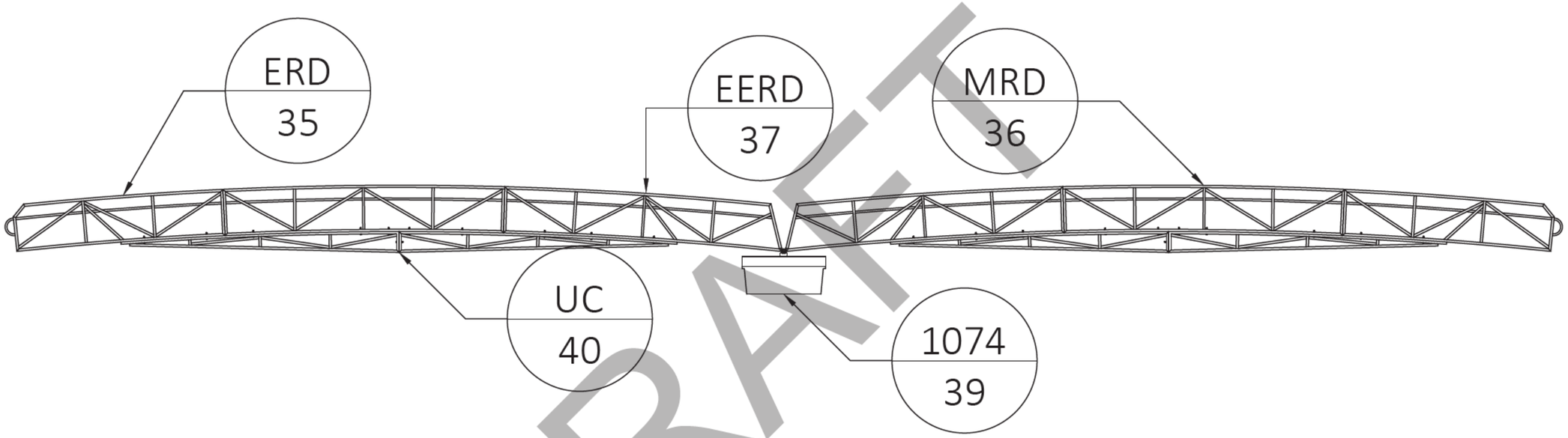


DRAFT

| | | |
|---|---|---|
| D:\Pictures\LOGO\FLOTATION LOGO\FSI LOGO BW.JPG | —SHEET DETAIL— | |
| | FILE NAME/CUSTOMER → | SHORES AT THE COMMON AREA.dwg |
| | DRAWN: 6/1/2023 | (2) 6' X 55' RAMPS W/ EQUALIZER SIDE VIEW |
| | CHECKED: | |
| | MANAG.APPR: | |
| | ISSUED TO: MANUFACTURE | |
| | DESIGN DRAFTER: R.BAKER | SIZE B · SCALE 1:100 · DWG TYPE/NO. · REV 0 |
| | FABRICATOR: | SHEET 32 OF 42 |

AUTOCAD .DWG

# DECKING

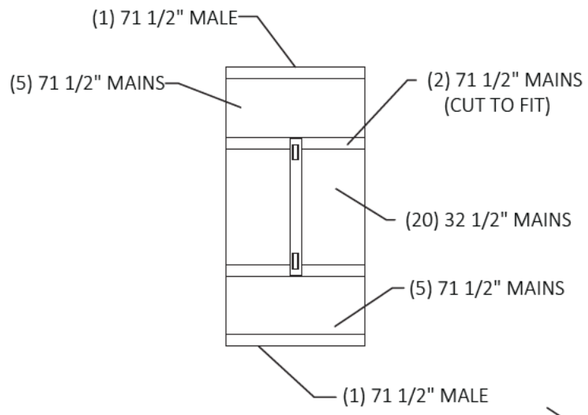


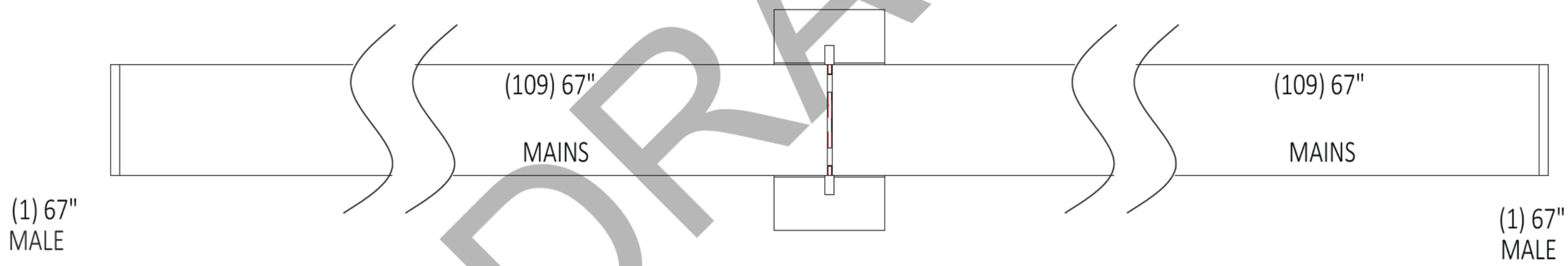


DRAFT

DECKING COLOR:

| | |
|---|---|
| —SHEET DETAIL— | |
| FILE NAME/CUSTOMER → | SHORES AT THE COMMON AREA.dwg |
| DRAWN: 6/1/2023 | (2) 6' X 55' RAMPS W/ EQUALIZER DECKING DIAGRAM |
| CHECKED: | |
| MANAG.APPR: | |
| ISSUED TO: MANUFACTURE | |
| DESIGN DRAFTER: R.BAKER | SIZE B · SCALE 1:80 · DWG TYPE/NO. · REV 0 |
| FABRICATOR: | SHEET 33 OF 42 |

D:\Pictures\LOGO\FLOTATION LOGO\FSI LOGO BW.JPG

AUTOCAD .DWG

| DECKING CUT LIST | | |
|---|---|---|
| QTY. | DESCRIPTION | COLOR |
| 218 | 67" MARINE MAINS | |
| 2 | 67" MARINE MALES | |
| | | |
| 12 | 71-1/2" MARINE MAINS | |
| 20 | 32 1/2" MARINE MAINS | |
| 2 | 71 $\frac{1}{2}$" MARINE MALES | |
| | | |
| | | |
| | | |
| | | |
| | | |

DRAFT

D:\Pictures\LOGO\FULSTATION LOGO\FSI LOGO BW.JPG

—SHEET DETAIL—

FILE NAME/CUSTOMER → SHORES AT THE COMMON AREA.dwg

DRAWN: 6/1/2023

CHECKED:

MANAG.APPR:

ISSUED TO: MANUFACTURE

DESIGN DRAFTER: R.BAKER

FABRICATOR:

(2) 6' X 55' RAMPS W/ EQUALIZER
DECKING CUT SHEET

| SIZE | SCALE | DWG TYPE/NO. | REV |
|---|---|---|---|
| B | 1:80 | | 0 |

SHEET 34 OF 42

AUTOCAD .DWG

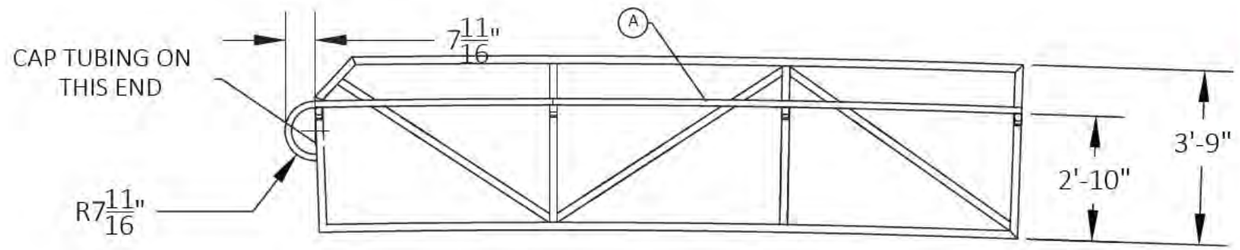


| STOCK LIST | | |
|---|---|---|
| DET. NO. | QTY. | DESCRIPTION |
| A | 2 | 1 1/4" SCH. 40 ALUM. PIPE 18' LG. **ROLLED ON ONE END** CUT TO FIT** |
| B | 8 | GRAB BAR BRACKETS 1 3/4" LG. |
| C | 2 | 1" X 2" TUBING 15'-2" LG. |

END RAMP SECTION

SEE ATTACHMENT
SHEET FOR THIS
END OF
THE RAMP

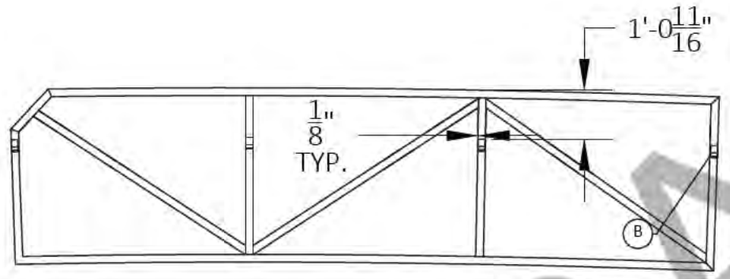


1'-0 11/16"
FROM THE TOP OF
THE RAMP TO THE
TOP OF THE GRAB RAIL
BRACKET

BOLT-UPS
ON THE THIS
END OF THE RAMP

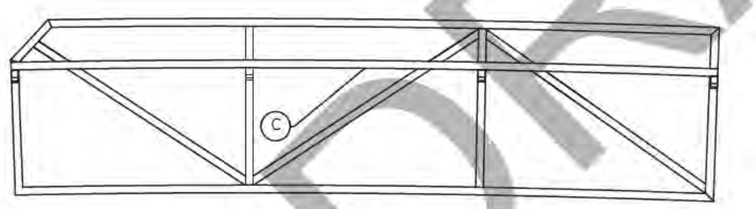


END RAMP SECTION

HANDRAILS ROLL INTO
END OF RAMP HANDLE

67" DECKING USED

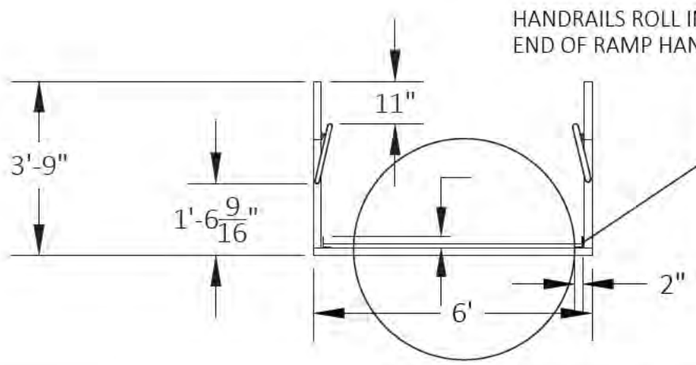


1/8"X2"X3"
ANGLE USED AS
TOE RAIL!
USE (1) 1/8"X 2"
FLATPLATE DOWN THE
CENTER OF THE RAMP

12 11/16"
FROM THE TOP OF
THE RAMP TO THE
TOP OF THE GRAB RAIL
BRACKET

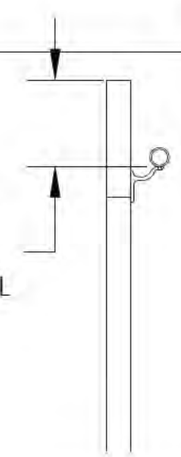

6 X 15' END
RAMP SECTION

DRAFT

| —SHEET DETAIL— | | | | |
|---|---|---|---|---|
| FILE NAME/CUSTOMER → | SHORES AT THE COMMON AREA.dwg | | | |
| DRAWN: 6/1/2023 | (2) 6' X 55' RAMPS W/ EQUALIZER ERD | | | |
| CHECKED: | | | | |
| MANAG.APPR: | | | | |
| ISSUED TO: MANUFACTURE | | | | |
| DESIGN DRAFTER: R.BAKER | SIZE B | SCALE 1:40 | DWG TYPE/NO. | REV 0 |
| FABRICATOR: | | | SHEET 35 OF 42 | |

D:\Pictures\LOGO\FLOATION LOGO\FPS LOGO BW.JPG

AUTOCAD .DWG

| STOCK LIST | | |
|---|---|---|
| DET. NO. | QTY. | DESCRIPTION |
| A | 2 | 1 1/4" SCH. 40 ALUM. PIPE 20' LG. CUT TO FIT** |
| B | 2 | 1 1/4" SCH. 40 ALUM PIPE 10'–1 5/16" LG. |
| C | 10 | GRAB BAR BRACKETS 1 3/4" LG. |

INSIDE VIEW

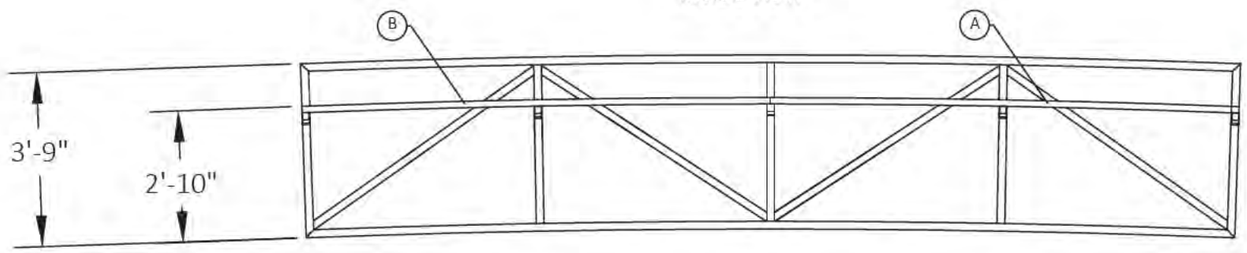


MIDDLE RAMP SECTION

BOLT-UPS
ON THE THIS
END OF THE RAMP

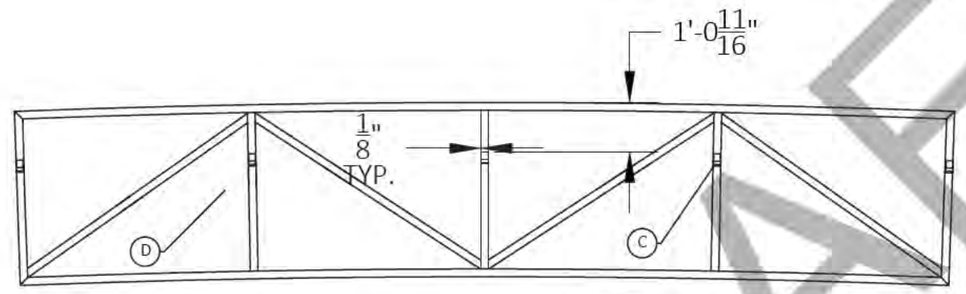


1'-0 11/16"
FROM THE TOP OF
THE RAMP TO THE
TOP OF THE GRAB RAIL
BRACKET

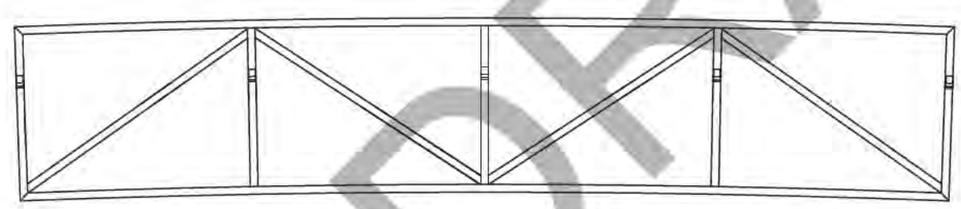

MIDDLE RAMP SECTION

HANDRAILS ROLL INTO
END OF RAMP HANDLE

DECKING USED

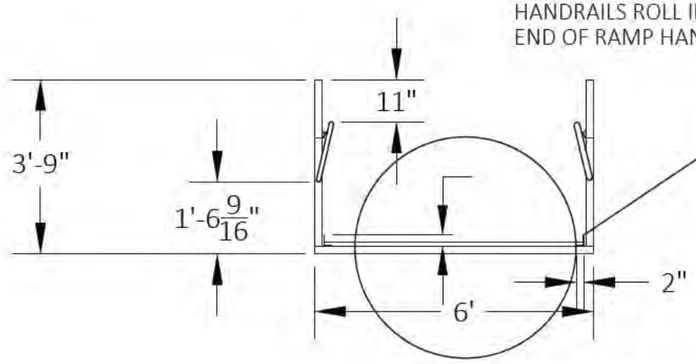


1/8"X2"X3"
ANGLE USED AS
TOE RAIL!
USE (1) 1/8"X 2"
FLATPLATE DOWN THE
CENTER OF THE RAMP

12 11/16"
FROM THE TOP OF
THE RAMP TO THE
TOP OF THE GRAB RAIL
BRACKET

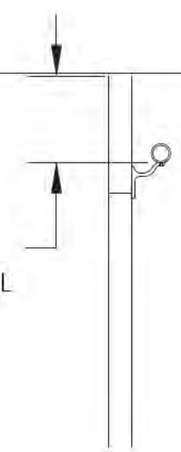

6' X 20' MIDDLE
RAMP SECTION

DRAFT

| –SHEET DETAIL– | |
|---|---|
| FILE NAME/CUSTOMER → | SHORES AT THE COMMON AREA.dwg |
| DRAWN: 6/1/2023 | (2) 6' X 55' RAMPS W/ EQUALIZER MRD |
| CHECKED: | |
| MANAG.APPR: | |
| ISSUED TO: MANUFACTURE | |
| DESIGN DRAFTER: R.BAKER | SIZE B · SCALE 1:24 · DWG TYPE/NO. · REV 0 |
| FABRICATOR: | SHEET 36 OF 42 |

D:\Pictures\LOGO\FLOTATION LOGO\FS LOGO BW.jpg

AUTOCAD .DWG

| | | |
|---|---|---|
| A | 2 | 1 1/4" SCH. 40 ALUM. PIPE 13' LG. **ROLLED ON ONE END** CUT TO FIT** |
| B | 2 | 1 1/4" SCH. 40 ALUM PIPE 10'-1 5/16" LG. |
| C | 10 | GRAB BAR BRACKETS 1 3/4" LG. |

INSIDE VIEW

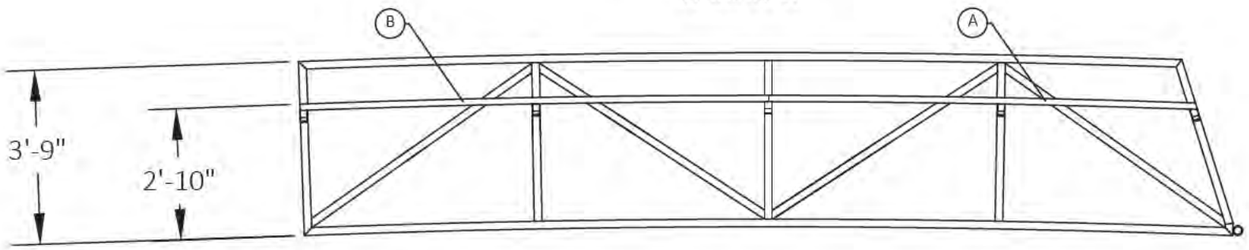


EQUALIZER END RAMP SECTION

BOLT-UPS
ON THE THIS
END OF THE RAMP

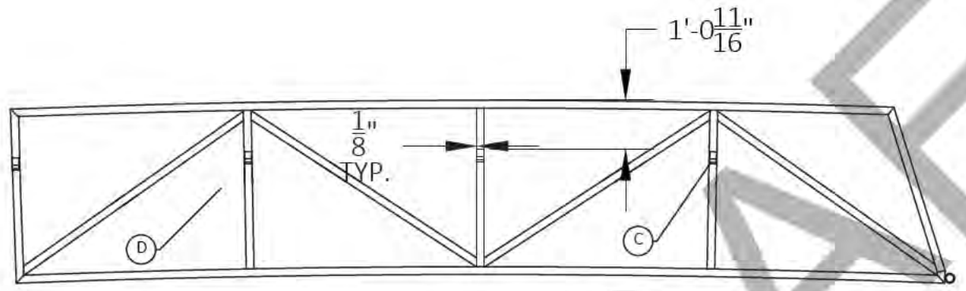


1'-0 11/16"
FROM THE TOP OF
THE RAMP TO THE
TOP OF THE GRAB RAIL
BRACKET

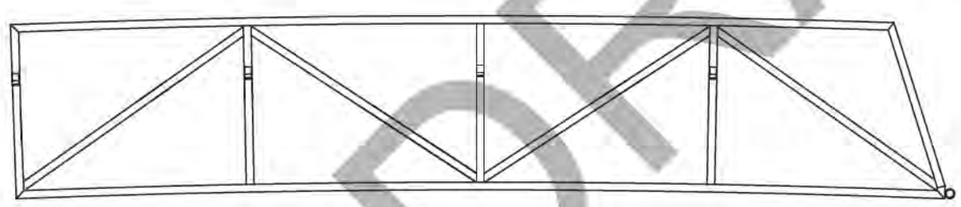

72" TRACK AND PIPE
ON THE THIS
END OF THE RAMP

EQUALIZER END RAMP SECTION

HANDRAILS ROLL INTO
END OF RAMP HANDLE

DECKING USED

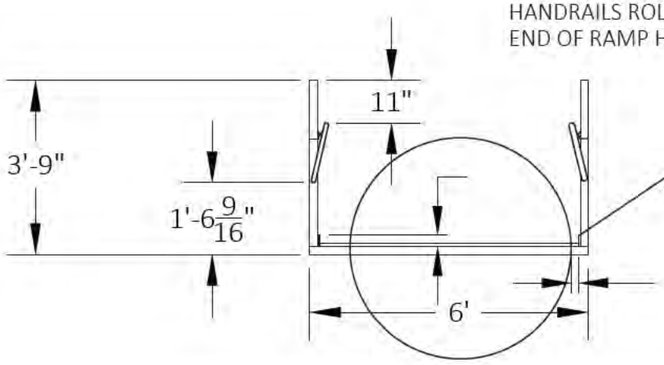


1/8"X2"X3"
ANGLE USED AS
TOE RAIL!
USE (1) 1/8"X 2"
FLATPLATE DOWN THE
CENTER OF THE RAMP

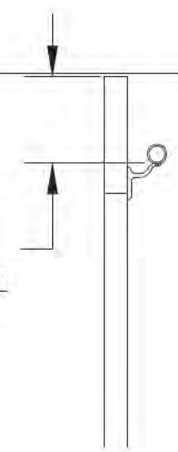

12 11/16"
FROM THE TOP OF
THE RAMP TO THE
TOP OF THE GRAB RAIL
BRACKET

6' X 20' EQUALIZER END
RAMP SECTION

DRAFT

| | | | |
|---|---|---|---|
| —SHEET DETAIL— | | | |
| FILE NAME/CUSTOMER → | SHORES AT THE COMMON AREA.dwg | | |
| DRAWN: 6/1/2023 | (2) 6' X 55' RAMPS W/ EQUALIZER EERD | | |
| CHECKED: | | | |
| MANAG.APPR: | | | |
| ISSUED TO: MANUFACTURE | | | |
| DESIGN DRAFTER: R.BAKER | SIZE B / SCALE 1:40 | DWG TYPE/NO.: | REV 0 |
| FABRICATOR: | | | SHEET 37 OF 42 |

D:\Pictures\LOGO\FLOTATION LOGO\PS LOGO BW.JPG

AUTOCAD .DWG

| CUT LIST | | | | | | | |
|---|---|---|---|---|---|---|---|
| DIE NUMBER | ITEM | QTY. | DESCRIPTION | DEGREE | FT | IN | TOTAL FT |
| FH-07812 | A | 1 | RAMP PIPE | 0°-0° | 2 | 9 7/16" | #### |
| FS-07813 | B | 2 | RAMP TRACK | 0°-0° | 6 | 0" | 12.00 |
| FH-07812 | C | 2 | RAMP PIPE | 0°-0° | | 9 7/16" | #### |
| FH-07812 | D | 2 | RAMP PIPE | 0°-0° | | 9 11/16" | #### |

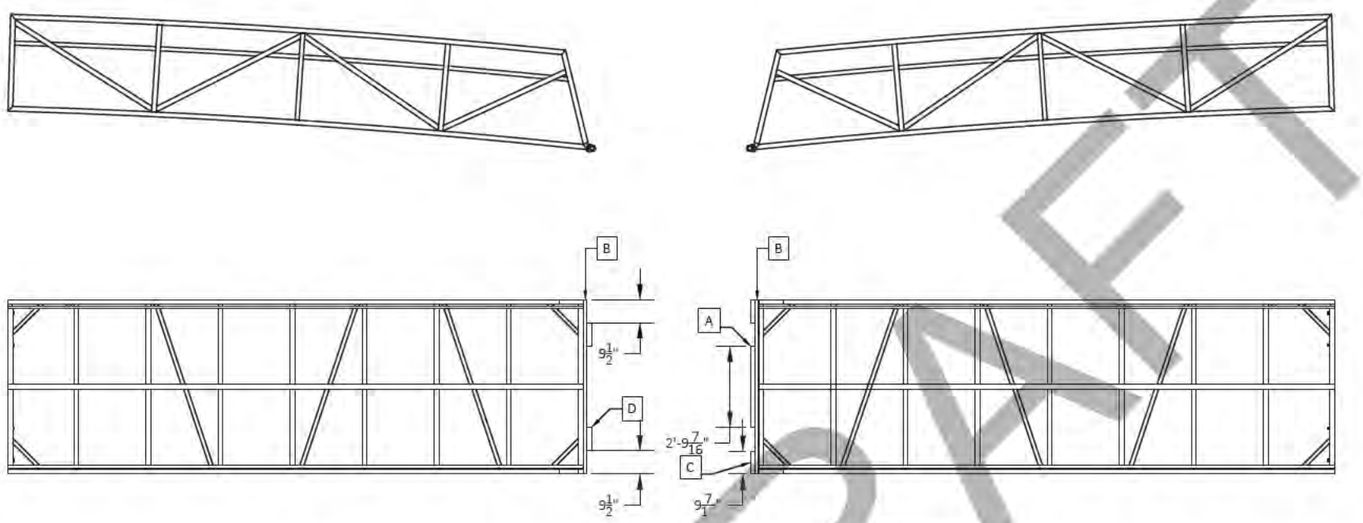


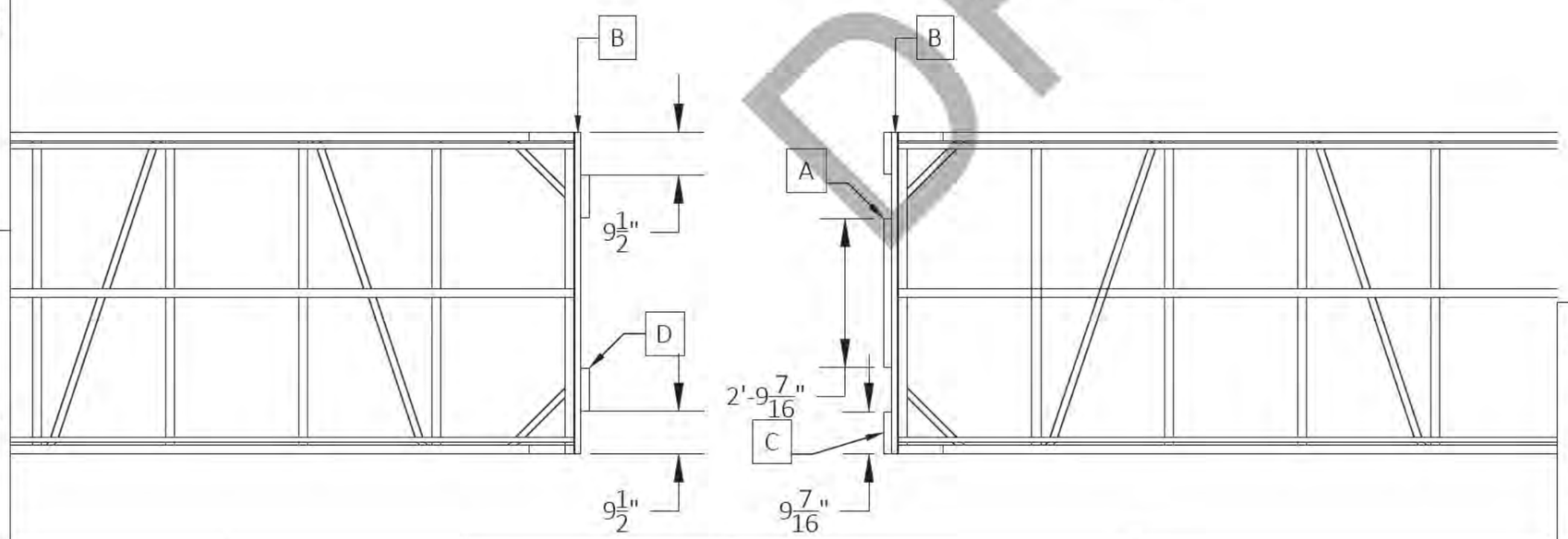


DRAFT

| | | |
|---|---|---|
| —SHEET DETAIL— | | |
| FILE NAME/CUSTOMER → | SHORES AT THE COMMON AREA.dwg | |
| DRAWN: 6/1/2023 | (2) 6' X 55' RAMPS W/ EQUALIZER<br>EQ END RAMP DETAIL | |
| CHECKED: | | |
| MANAG.APPR: | | |
| ISSUED TO: MANUFACTURE | | |
| DESIGN DRAFTER: R.BAKER | SIZE B / SCALE 1:32 | DWG TYPE/NO. / REV 0 |
| FABRICATOR: | | SHEET 38 OF 42 |

D:\Pictures\LOGO\FLOTATION LOGO\FP LOGO BW.JPG

AUTOCAD .DWG

| CUT LIST | | | | | | | |
|---|---|---|---|---|---|---|---|
| DIE NUMBER | ITEM | QTY. | DESCRIPTION | DEGREE | FT | IN | TOTAL FT |
| FS-00431 | A | 2 | 8" H.W. | 45°-45° | 12 | 0" | 24.00 |
| FS-00431 | B | 2 | 8" H.W. | 45°-45° | 6 | 0" | 12.00 |
| FS-00431 | C | 5 | 8" H.W. | 45°-45° | 5 | 7 1/2" | ##### |
| | D | 1 | 6" H.W. | 0°-0° | 8 | 5/8" | 8.05 |
| FS-00431 | E | 8 | 8" H.W. | 45°-45° | 1 | 2" | 9.33 |
| FH-07812 | F | 2 | RAMP PIPE | 0°-0° | | 8" | 1.33 |
| FS-00678 | G | 2 | ¼" X 6" FLATPLATE | 0°-0° | | 2 1/4" | #### |
| FS-00431 | H | 2 | 8" H.W. | 0°-0° | 2 | 9 3/16" | #### |
| FS-07813 | I | 1 | RAMP TRACK | 0°-0° | 8 | 0 | 8.00 |

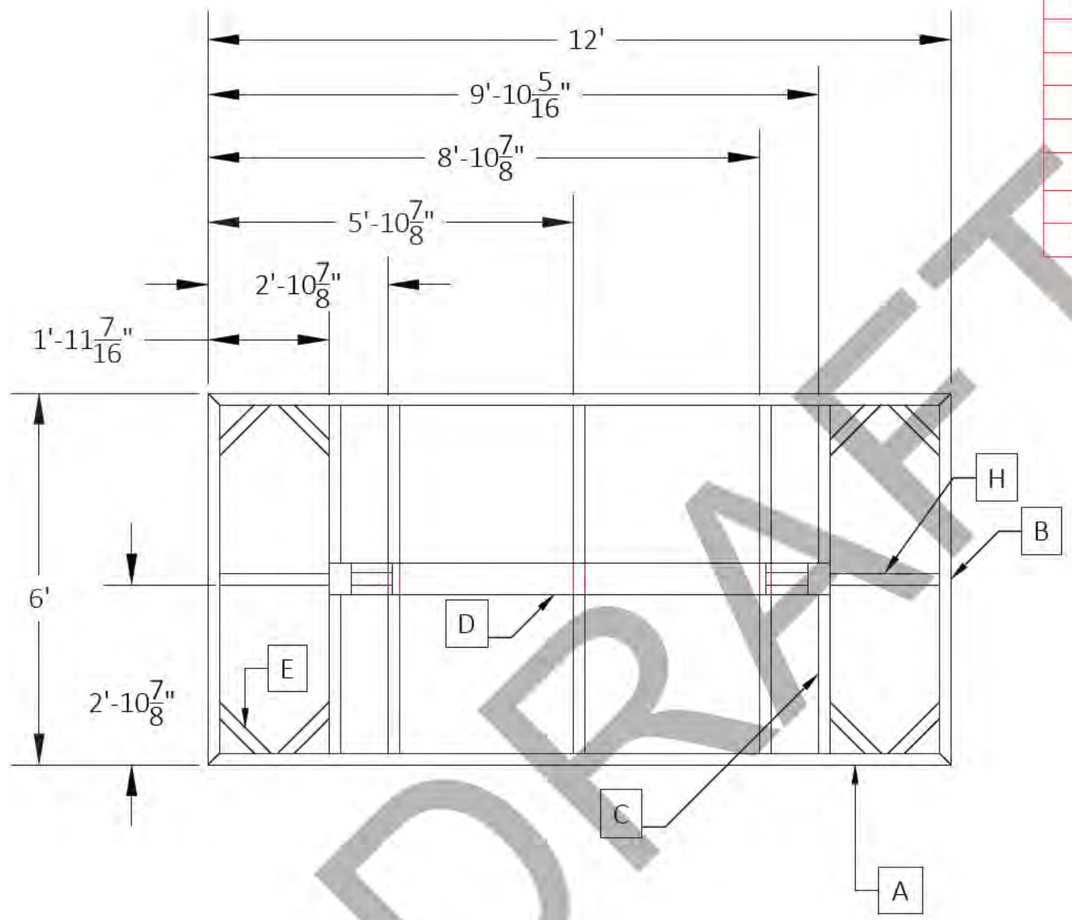


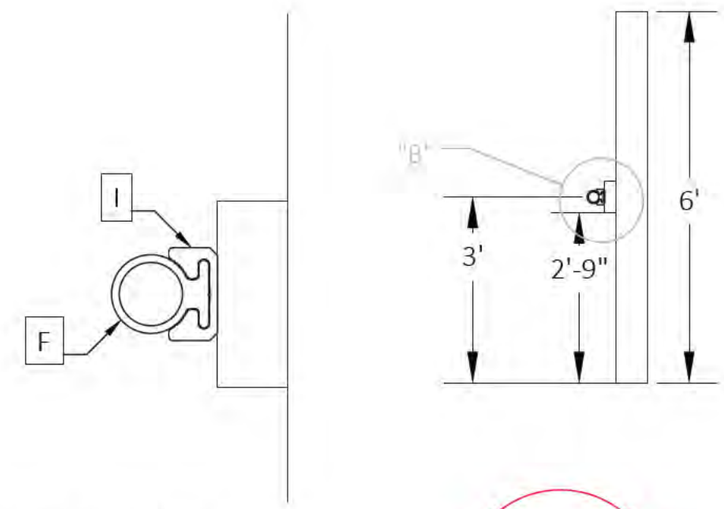


VIEW IN CIRCLE "B"

1074

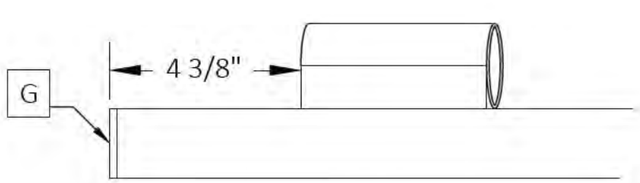


VIEW IN CIRCLE "A"

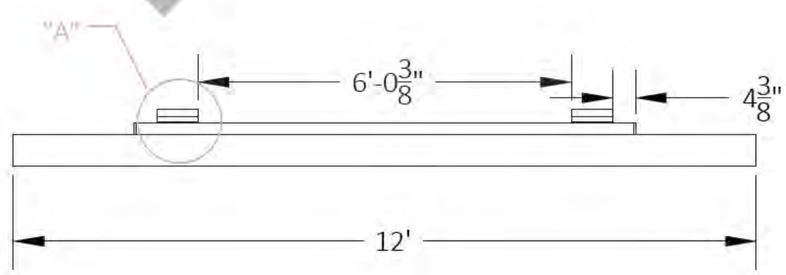


DRAFT

| | | |
|---|---|---|
| —SHEET DETAIL— | | |
| FILE NAME/CUSTOMER → | SHORES AT THE COMMON AREA.dwg | |
| DRAWN: 6/1/2023 | (2) 6' X 55' RAMPS W/ EQUALIZER 1074 | |
| CHECKED: | | |
| MANAG.APPR: | | |
| ISSUED TO: MANUFACTURE | | |
| DESIGN DRAFTER: R.BAKER | SIZE B / SCALE 1:30 | DWG TYPE/NO. / REV 0 |
| FABRICATOR: | | SHEET 39 OF 42 |

D:\Pictures\LOGO\FLOTATION LOGO\FP2 LOGO BW.JPG

AUTOCAD .DWG

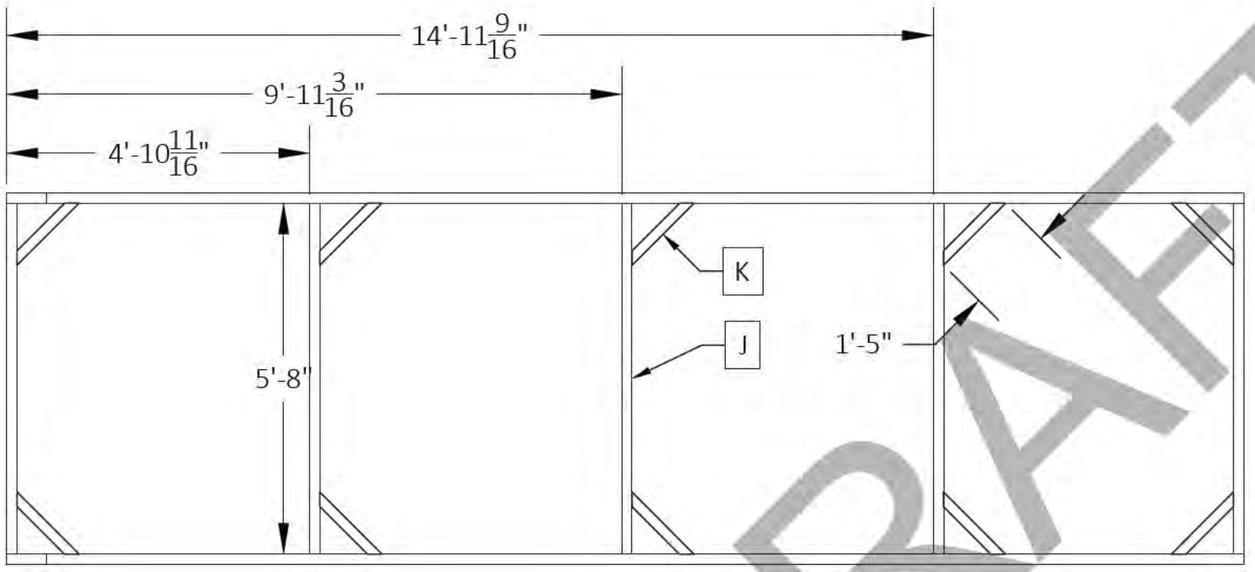


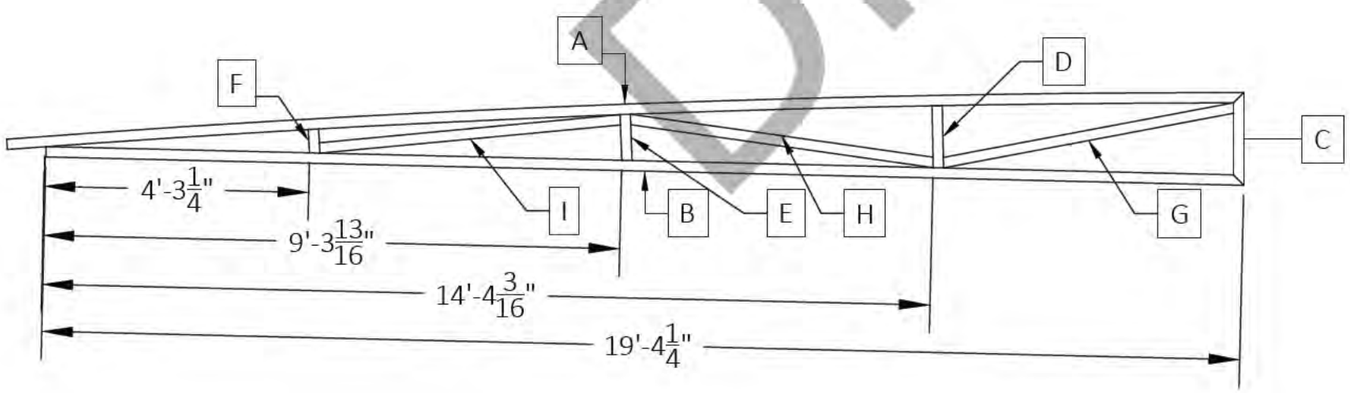


## CUT/STOCK LIST

| DIE NUMBER | ITEM | QTY. | DESCRIPTION | DEGREE | FT. | IN. | TOTAL FT. |
|---|---|---|---|---|---|---|---|
| FH-01356 | A | 2 | 1/8" X 2" X 2" TUBE | 45°-0° | 20 | 0" | 40.00 |
| FH-01356 | B | 2 | 1/8" X 2" X 2" TUBE | 45°-45° | 19 | 4 1/4" | ##### |
| FH-01356 | C | 2 | 1/8" X 2" X 2" TUBE | 45°-45° | 1 | 6" | 3.00 |
| FH-01356 | D | 2 | 1/8" X 2" X 2" TUBE | 0°-2° | 1 | 1/16" | 2.01 |
| FH-01356 | E | 2 | 1/8" X 2" X 2" TUBE | 0°-2° | | 8 15/16" | #### |
| F 01356 | F | 2 | 1/8" X 2" X 2" TUBE | 0°-2° | | 4 11/16 | 0.78 |
| FH-01356 | G | 2 | 1/8" X 2" X 2" TUBE | 10°-11° | 4 | 8 7/8 | 9.48 |
| FH-01356 | H | 2 | 1/8" X 2" X 2" TUBE | 9°-10° | 4 | 11 1/4 | 9.88 |
| F 01356 | I | 2 | 1/8" X 2" X 2" TUBE | 2°-3° | 4 | 10 1/2 | 9.75 |
| FH-01 56 | J | 5 | 1/8" X 2" X 2" TUBE | 0°-0° | 5 | 8 | 28.33 |
| FH-01356 | K | 10 | 1/8" X 2" X 2" TUBE | 0°-2° | 1 | 5 | 14.17 |

(4)REQUIRED

DRAFT

D:\Pictures\LOGO\FLOTATION LOGO\FSI LOGO BW.JPG

| | |
|---|---|
| —SHEET DETAIL— | |
| FILE NAME/CUSTOMER → | SHORES AT THE COMMON AREA.dwg |
| DRAWN: 6/1/2023 | (2) 6' X 55' RAMPS W/ EQUALIZER UC |
| CHECKED: | |
| MANAG.APPR: | |
| ISSUED TO: MANUFACTURE | |
| DESIGN DRAFTER: R.BAKER | SIZE B · SCALE 1:30 · DWG TYPE/NO. · REV 0 |
| FABRICATOR: | SHEET 40 OF 42 |

AUTOCAD .DWG

| ➔ ACCESSORIES ← | | | |
|---|---|---|---|
| QTY. | DESCRIPTION | PC | COLOR |
| 54 | HORIZONTAL BUMPER | | |
| 24 | CORNER BUMPER | | |
| 105 | SUPER CUSHION | | |
| 2 | DIAGONAL CABLES (RAMP) | | |
| 132 | POST TRIM (2pc. - # of post) | | |
| 1 | ROLLER GUIDE ASSEMBLY | | |
| 55 | FLOAT PLUGS | | |
| 42 | CLEATS | | |
| 51 | 20' STAIR NOSING (sti k) | | |
| 2 | RAMP WEIGHT LIMIT TAG | | |
| 24 | 4" PVC CAPS | | |
| 24 | SPUD POLE **SI ENCERS * | | |
| 24 | 4" GALVANIZED SPUD POLES | | |
| 2 | DECKING TOUCH-UP | | |

DRAFT

D:\Pictures\LOGO\FLOTATION LOGO\FS LOGO BW.JPG

—SHEET DETAIL—

FILE NAME/CUSTOMER ➔ SHORES AT THE COMMON AREA.dwg

DRAWN: 6/1/2023

CHECKED:

MANAG.APPR:

ISSUED TO: MANUFACTURE

DESIGN DRAFTER: R.BAKER

FABRICATOR:

ACCESSORY SHEET

| SIZE | SCALE | DWG TYPE/NO. | REV |
|---|---|---|---|
| B | 1:30 | | 0 |

SHEET 41 OF 42

AUTOCAD .DWG

## LOAD LIST

| ITEM # | QTY | DESCRIPTION | COLOR |
|---|---|---|---|
| | | **FLOATS** | |
| | 20 | 3X6X16 | |
| | 11 | 4X6X16 | |
| | 24 | 4X6X20 | |
| | | | |
| | | **FRAMES** | |
| BW627L | 2 | 6 X 27 BACKWALK | |
| BW625 | 8 | 6 X 25 BACKWALK | |
| F424 | 11 | FINGER | |
| | | | |
| | | **DECKING (LOCKDRY AND MARINE)** | |
| | 530 | 47-1/2" LOCKDRY MAINS | |
| | 490 | 5' 11-1/2" LOCKDRY MAINS | |
| | | | |
| | 11 | 47-1/2" LOCKDRY STARTER | |
| | 1 | 5' 11-1/2" LOCKDRY STARTER | |
| | | | |
| | 11 | 47-1/2" LOCKDRY FINISHER | |
| | 1 | 5' 11-1/2" LOCKDRY FINISHER | |
| | | | |
| | | | |
| | | | |
| | | | |

## LOAD LIST

| ITEM # | QTY. | DESRIPTION | FT. | IN. | COLOR |
|---|---|---|---|---|---|
| | | **POST AND BRACES** | | | |
| A | 44 | 4" POST | 10 | 2 | |
| B | 22 | 4" POST | 10 | 8-1/16 | |
| C | 22 | 4" POST | 11 | 2-3/16 | |
| D | 22 | 4" POST | 11 | 2 3/8 | |
| E | 22 | 4" POST | 10 | 8 1/4 | |
| | 42 | 4" STUB UP | 7 | 4 | |
| | | | | | |
| SP1 | 8 | SPLIT HAND RAIL | 20 | $8\frac{7}{8}$ | |
| SP2 | 2 | SPLIT HAND RAIL | 18 | 9-15/1 | |
| | | | | | |
| | | ANCHORING | | | |
| K-SP1 | 21 | 8' SPUD POLE COLLARS | | | |
| SP9-8 | 2 | 3' SPUD POLE COLLARS | | | |
| | 23 | 21' SPUD POLES | | | |
| | | | | | |
| | | **ROOF COMP NEN** | | | |
| F | 10 | 2" X 2 ANGLE | 6 | $\frac{1}{2}$ | |
| G | 10 | 2 2" ANGLE | 6 | $5\frac{1}{8}$ | |
| H | 10 | 2" X 2 N LE | 6 | $5\frac{1}{16}$ | |
| I | 10 | " X 2" AN E | 6 | $3\frac{5}{16}$ | |
| J | | 2" X ANGLE | 4 | $5\frac{1}{4}$ | |
| K | 0 | 2" X 2 NGLE | 5 | $2\frac{7}{16}$ | |
| L | 10 | 2" X 2" NGLE | 29 | $7\frac{1}{8}$ | |
| N | 16 | Z EAM | 30 | | |
| O | 64 | Z BEAM | 29 | | |
| | | | | | |
| | | | | | |
| | | | | | |
| | | | | | |
| | | | | | |
| | | | | | |

## RAMP LOAD LIST

| QTY. | DESCRIPTION | BANK ATTACHMENT | WATER ATTACHMENT | COLOR |
|---|---|---|---|---|
| | **RAMP** | | | |
| 2 | 6' X 55' | ROLLERS | DOCK | |
| 1 | 6' X 12" EQUALIZER | | | |
| | | | | |
| 218 | 67" MARINE MAINS | | | |
| 2 | 67" MARINE MALES | | | |
| | | | | |
| 2 | 71-1/2" MARINE MAINS | | | |
| 20 | 32 1/2" MARINE MAINS | | | |
| 2 | $71\frac{1}{2}$" MARINE MALES | | | |
| | | | | |

DRAFT

D:\Pictures\LOGO\FLOTATION LOGO\FSI LOGO BW.JPG

—SHEET DETAIL—

FILE NAME/CUSTOMER → SHORES AT THE COMMON AREA.dwg

DRAWN: 6/1/2023

CHECKED:

MANAG.APPR:

ISSUED TO: MANUFACTURE

DESIGN DRAFTER: R.BAKER

FABRICATOR:

LOAD LIST

| SIZE | SCALE | DWG TYPE/NO. | REV |
|---|---|---|---|
| B | 1:30 | | 0 |

SHEET 42 OF 42

AUTOCAD .DWG

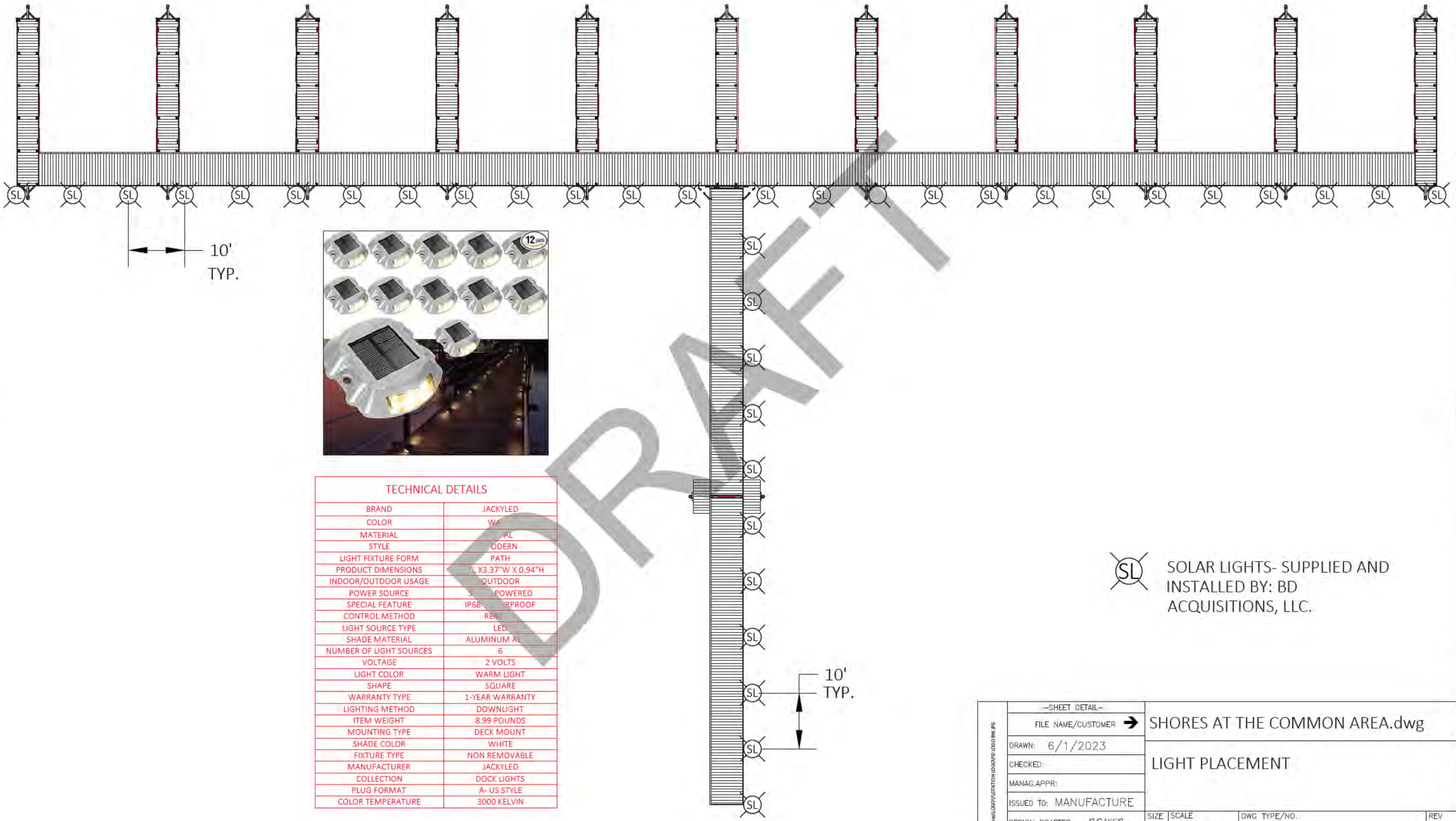


DRAFT

| TECHNICAL DETAILS | |
|---|---|
| BRAND | JACKYLED |
| COLOR | WA |
| MATERIAL | AL |
| STYLE | ODERN |
| LIGHT FIXTURE FORM | PATH |
| PRODUCT DIMENSIONS | L X3.37"W X 0.94"H |
| INDOOR/OUTDOOR USAGE | OUTDOOR |
| POWER SOURCE | S POWERED |
| SPECIAL FEATURE | IP68 RPROOF |
| CONTROL METHOD | REM |
| LIGHT SOURCE TYPE | LED |
| SHADE MATERIAL | ALUMINUM A |
| NUMBER OF LIGHT SOURCES | 6 |
| VOLTAGE | 2 VOLTS |
| LIGHT COLOR | WARM LIGHT |
| SHAPE | SQUARE |
| WARRANTY TYPE | 1-YEAR WARRANTY |
| LIGHTING METHOD | DOWNLIGHT |
| ITEM WEIGHT | 8.99 POUNDS |
| MOUNTING TYPE | DECK MOUNT |
| SHADE COLOR | WHITE |
| FIXTURE TYPE | NON REMOVABLE |
| MANUFACTURER | JACKYLED |
| COLLECTION | DOCK LIGHTS |
| PLUG FORMAT | A- US STYLE |
| COLOR TEMPERATURE | 3000 KELVIN |

SL — SOLAR LIGHTS- SUPPLIED AND INSTALLED BY: BD ACQUISITIONS, LLC.

| | | | | |
|---|---|---|---|---|
| D:\Pictures\LOGOS\FLOTATION LOGO\FS LOGO BW.JPG | –SHEET DETAIL– | SHORES AT THE COMMON AREA.dwg | | |
| | FILE NAME/CUSTOMER → | | | |
| | DRAWN: 6/1/2023 | LIGHT PLACEMENT | | |
| | CHECKED: | | | |
| | MANAG.APPR: | | | |
| | ISSUED TO: MANUFACTURE | | | |
| | DESIGN DRAFTER: R.BAKER | SIZE B / SCALE 1:200 | DWG TYPE/NO. | REV 0 |
| | FABRICATOR: | | | SHEET 42 OF 42 |

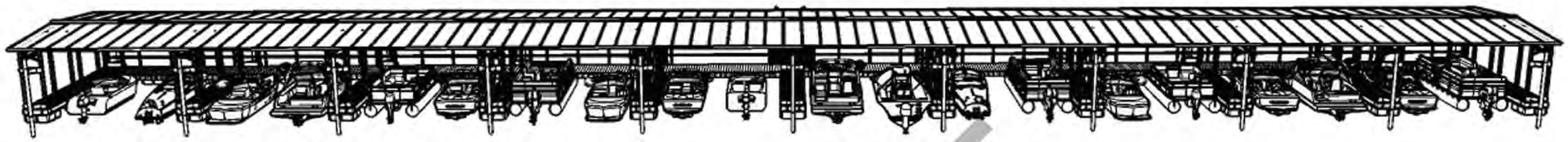

# THE SHORES AT THE PENINSULA
## 2769 County Road 2730
## Honey Grove, TX 75446

| DESIGN CRITERIA | |
|---|---|
| BUILDING CODE: IBC 2015 & ASCE 7-10 | |
| LOADING: | |
| DEAD LOAD (roof) | 3psf |
| DEAD LOAD (bridge) | 3.5psf |
| LIVE LOAD (roof) | 20psf |
| LIVE LOAD (bridge) | 25psf |
| SNOW LOAD | 4psf |
| WIND LOAD | 23psf |
| ALUMINUM CODE: ADM 2010 | |
| ALUMINUM ALLOY: 6005A-T61 | |
| FILLER ALLOY: 5356 | |
| THE PEDESTRIAN BRIDGE SHOULD BE LIMITED TO A CAPACITY OF 12 PERSONS OR 2,000LBS. | |

DRA NG LIST

| SHEET NUMBER | DESCRIPTION | SHEET NU ER | DESCRIPTION |
|---|---|---|---|
| 1 | BANK VIEW A | 22 | 8' COLLAR FRONT |
| 2 | BA K VIE B | 23 | 8' COLLAR TOP |
| 3 | ANK VIEW | 24 | 8' COLLAR |
| 4 | LEFT VIEW | 25 | 4IN STUB UP |
| 5 | A GLE UTLIST | 26 | 3' COLLAR VIEWS |
| 6 | WA R VIEW A | 27 | 3' COLLAR |
| 7 | WATER EW B | 28 | 21' POLE |
| | ATER VIE C | 29 | SR1 |
| | AN VIEW | 30 | SR2 |
| 10 | ANC ORING VIEW | 31 | RAMP SIDE VIEW |
| 11 | F OAT DIAGRAM | 32 | RAMP SIDE DIAGRAM |
| 12 | ROOF ASSEMBLY | 33 | RAMP DECKING DIAGRAM |
| 13 | FRAME DIAGRAM | 34 | RAMP DECKING CUTLIST |
| 14 | DECKING DIAGRAM | 35 | END RAMP DETAIL |
| 15 | POST DIAGRAM | 36 | MIDDLE RAMP DETAIL |
| 16 | BW627L | 37 | EQ END RAMP DETAIL |
| 17 | BW625 | 38 | EQ END RAMP ATTACHMENT |
| 18 | BW625A | 39 | EQUALIZER |
| 19 | ATTACHMENT SHEET | 40 | UNDERCARRIAGE |
| 20 | F424 | 41 | ACCESSORIES |
| 21 | 8' COLLAR SIDE | 42 | LOAD SHEET |

STATE OF TEXAS
JONATHAN O'RILEY
124813
LICENSED
PROFESSIONAL ENGINEER
F-7422
07/31/2024

FLOTATION SYSTEMS, INC.™
ALUMINUM BOAT DOCKS

DRAFT

AUTOCAD .DWG

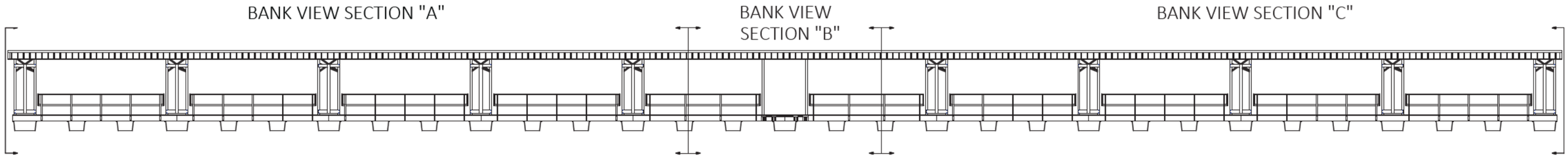


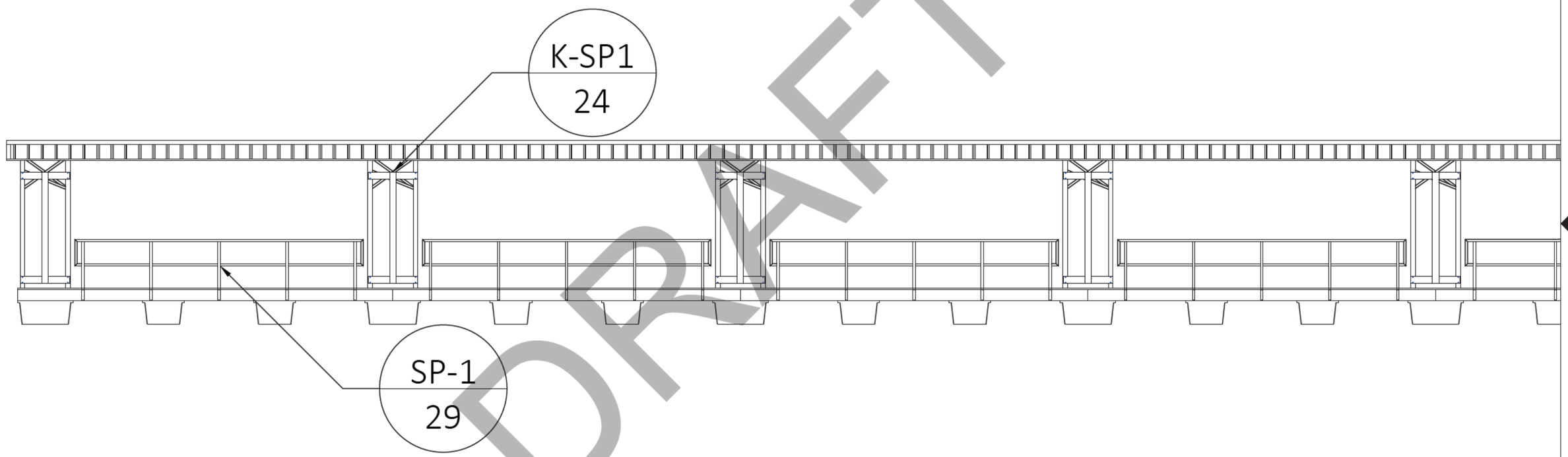


DRAFT

D:\Pictures\LOGO\FLOTATION LOGO\PSI LOGO B W.JPG

| -SHEET DETAIL- | |
|---|---|
| FILE NAME/CUSTOMER → | SHORES AT THE PENINSULA.dwg |
| DRAWN: 6/1/2023 | BANK VIEW SECTION "A" |
| CHECKED: | |
| MANAG.APPR: | |
| ISSUED TO: MANUFACTURE | |
| DESIGN DRAFTER: R.BAKER | SIZE B · SCALE 1:88 · DWG TYPE/NO. · REV 0 |
| FABRICATOR: | SHEET 1 OF 42 |

AUTOCAD .DWG

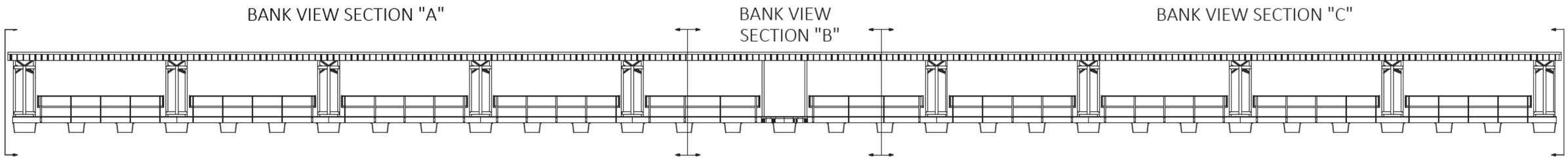


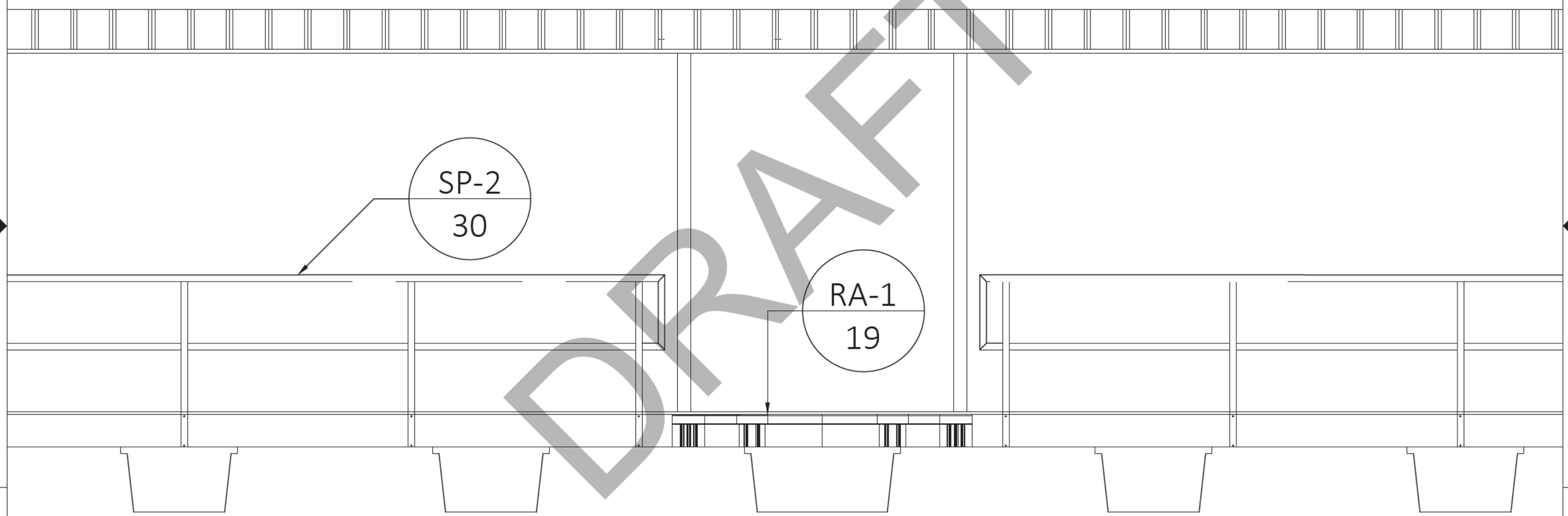


DRAFT

D:\Pictures\LOGO\LOCATION LOGO\PS LOGO BW.JPG

| -SHEET DETAIL- | |
|---|---|
| FILE NAME/CUSTOMER → | SHORES AT THE PENINSULA.dwg |
| DRAWN: 6/1/2023 | BANK VIEW SECTION "B" |
| CHECKED: | |
| MANAG.APPR: | |
| ISSUED TO: MANUFACTURE | |
| DESIGN DRAFTER: R.BAKER | SIZE B · SCALE 1:32 · DWG TYPE/NO. · REV 0 |
| FABRICATOR: | SHEET 2 OF 42 |

AUTOCAD .DWG

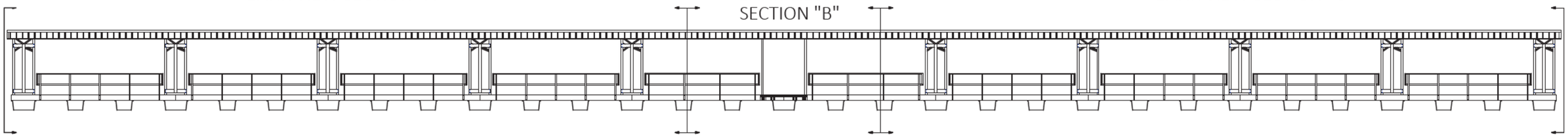


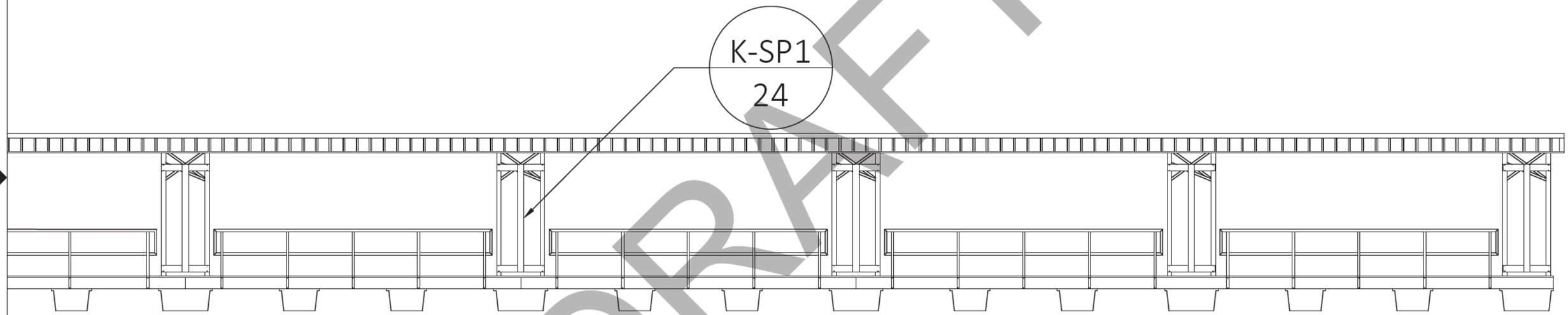


DRAFT

D:\Pictures\LOGO\LOGATION LOGO\PS LOGO BW.JPG

| -SHEET DETAIL- | |
|---|---|
| FILE NAME/CUSTOMER → | SHORES AT THE PENINSULA.dwg |
| DRAWN: 6/1/2023 | BANK VIEW SECTION "C" |
| CHECKED: | |
| MANAG.APPR: | |
| ISSUED TO: MANUFACTURE | |
| DESIGN DRAFTER: R.BAKER | SIZE B · SCALE 1:80 · DWG TYPE/NO. · REV 0 |
| FABRICATOR: | SHEET 3 OF 42 |

AUTOCAD .DWG

NOTE:
SEE POST DIAGRAM SH-15 FOR EXACT LOCATIONS
WHERE LATERAL BRACING IS REQUIRED. (G, H, I, J)

(2) 3/8"X5 1/2" H.B.
(4) 3/8"X7/8" WASHERS
(2) 3/8" NYLOCK NUTS
PER POST

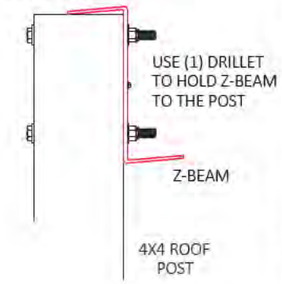


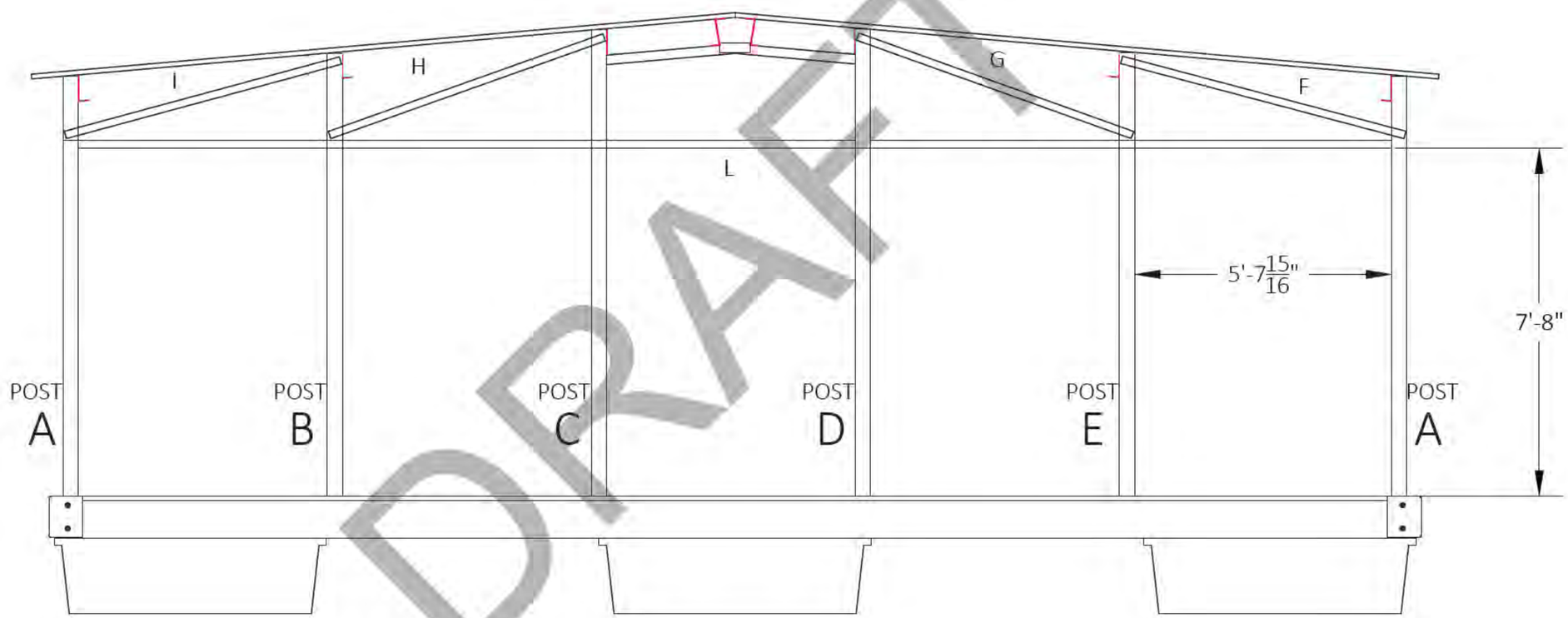


DRAFT

| | | |
|---|---|---|
| -SHEET DETAIL- | | |
| FILE NAME/CUSTOMER → | SHORES AT THE PENINSULA.dwg | |
| DRAWN: 6/1/2023 | LEFT SIDE VIEW | |
| CHECKED: | | |
| MANAG.APPR: | | |
| ISSUED TO: MANUFACTURE | | |
| DESIGN DRAFTER: R.BAKER | SIZE B / SCALE 1:34 | DWG TYPE/NO. / REV 0 |
| FABRICATOR: | | SHEET 4 OF 42 |

D:\Pictures\LOGO\VLOTATION LOGO\PS LOGO BW.JPG

AUTOCAD .DWG

# ROOF MATERIAL CUT LIST

| | QTY. | 2" X 2" ANGLE BRACING |
|---|---|---|
| F | 10 | 6'-5 1/12" LG. |
| G | 10 | 6'-5 1/8" LG. |
| H | 10 | 6'-5 1/16" LG. |
| I | 10 | 6'-3 5/16" |
| J | 20 | 4'-5 1/4" |
| K | 40 | 5'-2 7/16 |
| L | 10 | 29'-7 1/8 |
| | | |
| | | |
| | QTY. | Z-BEAM |
| N | 16 | 30' |
| O | 64 | 29' |

DRAFT

D:\Pictures\LOGOVK\STATION LOGO\VS LOGO B W.JPG

-SHEET DETAIL-

FILE NAME/CUSTOMER → SHORES AT THE PENINSULA.dwg

DRAWN: 6/1/2023

CHECKED:

MANAG.APPR:

ISSUED TO: MANUFACTURE

DESIGN DRAFTER: R.BAKER

FABRICATOR:

RIGHT SIDE VIEW

| SIZE | SCALE | DWG TYPE/NO. | REV |
|---|---|---|---|
| B | 1:34 | | 0 |

SHEET 5 OF 42

AUTOCAD .DWG

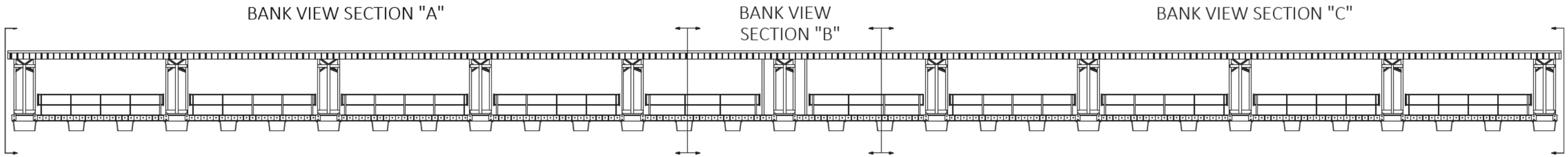


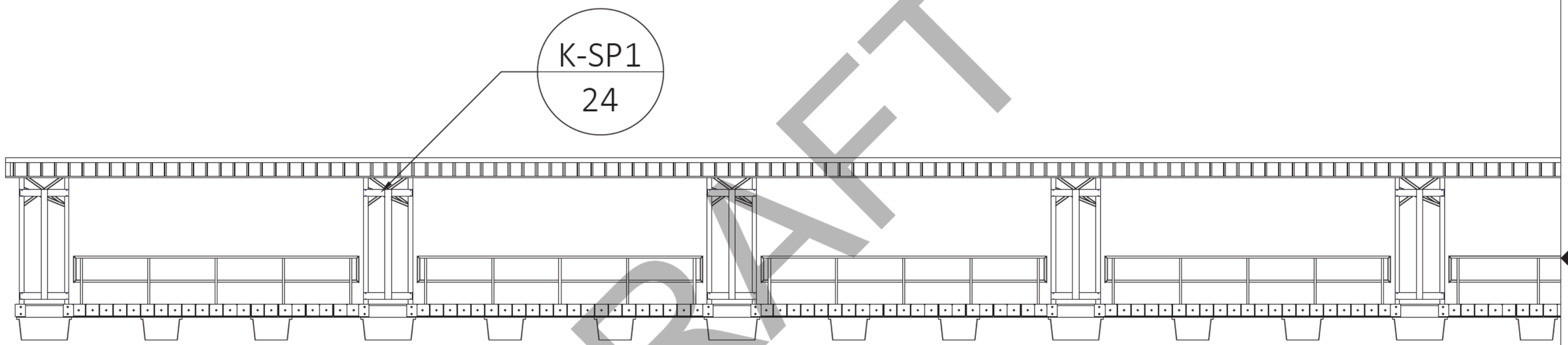


DRAFT

D:\Pictures\LOGO\VLOTATION LOGO\VS LOGO B W.JPG

| -SHEET DETAIL- | |
|---|---|
| FILE NAME/CUSTOMER → | SHORES AT THE PENINSULA.dwg |
| DRAWN: 6/1/2023 | WATER VIEW SECTION "A" |
| CHECKED: | |
| MANAG.APPR: | |
| ISSUED TO: MANUFACTURE | |
| DESIGN DRAFTER: R.BAKER | SIZE B · SCALE 1:50 · DWG TYPE/NO. · REV 0 |
| FABRICATOR: | SHEET 6 OF 42 |

AUTOCAD .DWG

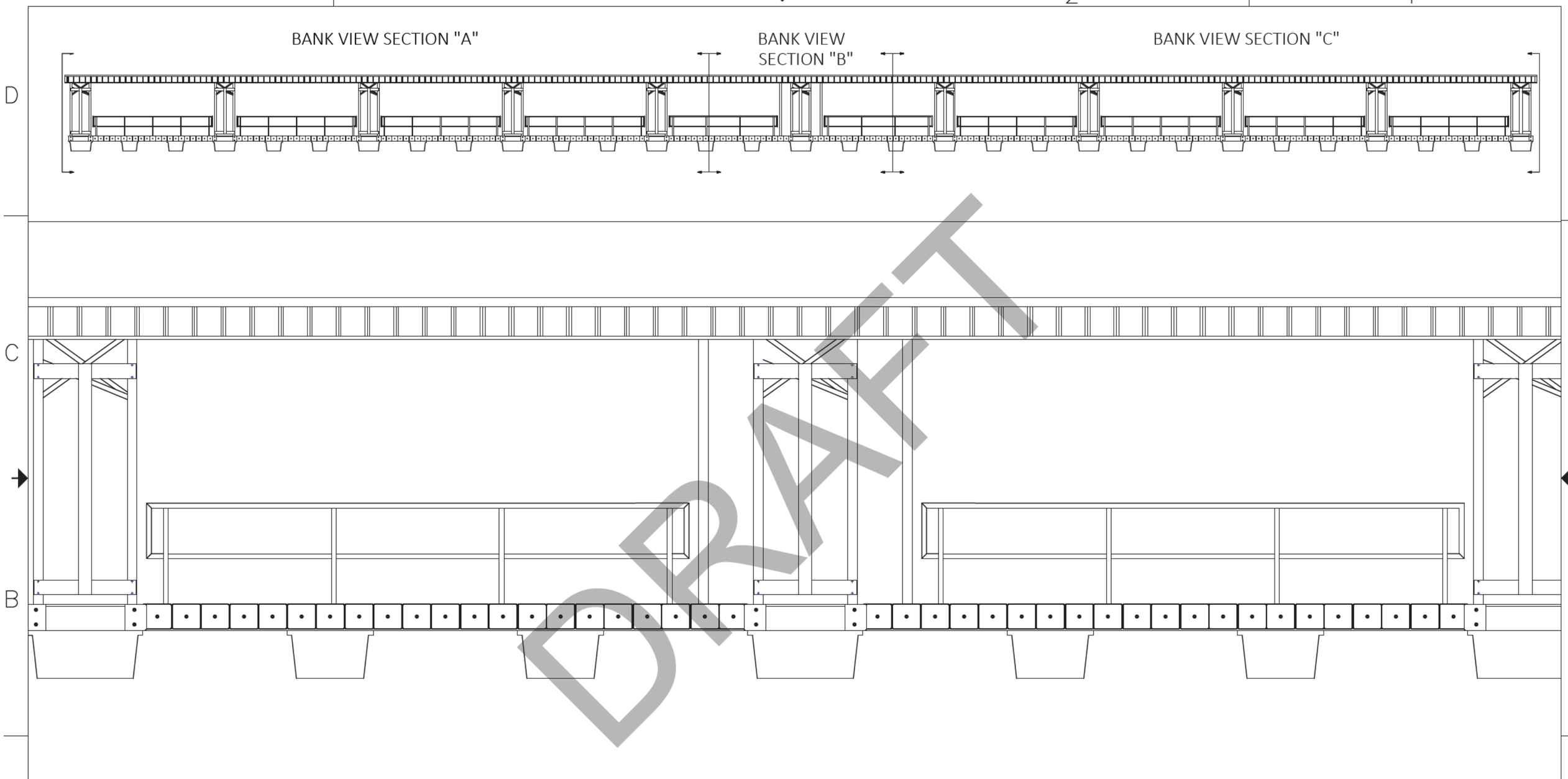


| | |
|---|---|
| FILE NAME/CUSTOMER | SHORES AT THE PENINSULA.dwg |
| DRAWN: 6/1/2023 | WATER VIEW SECTION "A" |
| CHECKED: | |
| MANAG.APPR: | |
| ISSUED TO: MANUFACTURE | |
| DESIGN DRAFTER: R.BAKER | SIZE B · SCALE 1:50 · DWG TYPE/NO. · REV 0 |
| FABRICATOR: | SHEET 7 OF 42 |

D:\Pictures\LOGO\LOTATION LOGO\PS LOGO BW.JPG

AUTOCAD .DWG

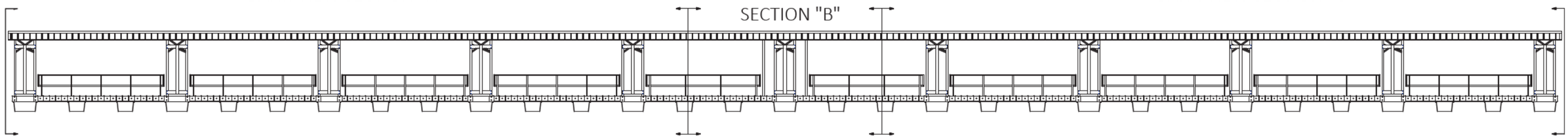


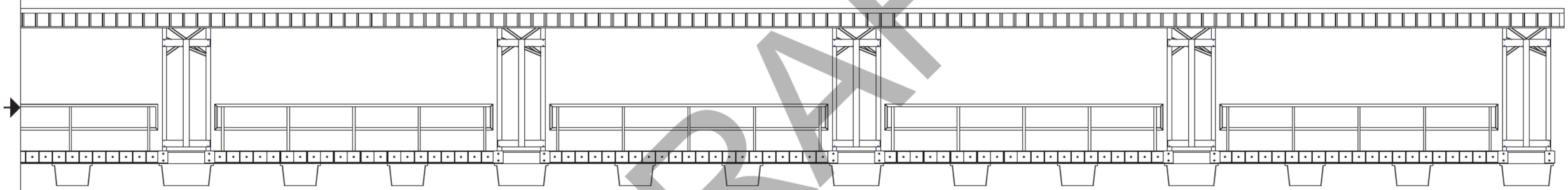

DRAFT

D:\Pictures\LOGO\VLCITATION LOGO\VS LOGO B W.JPG

| -SHEET DETAIL- | |
|---|---|
| FILE NAME/CUSTOMER | SHORES AT THE PENINSULA.dwg |
| DRAWN: 6/1/2023 | WATER VIEW SECTION "A" |
| CHECKED: | |
| MANAG.APPR: | |
| ISSUED TO: MANUFACTURE | |
| DESIGN DRAFTER: R.BAKER | SIZE B · SCALE 1:80 · DWG TYPE/NO. · REV 0 |
| FABRICATOR: | SHEET 8 OF 42 |

AUTOCAD .DWG

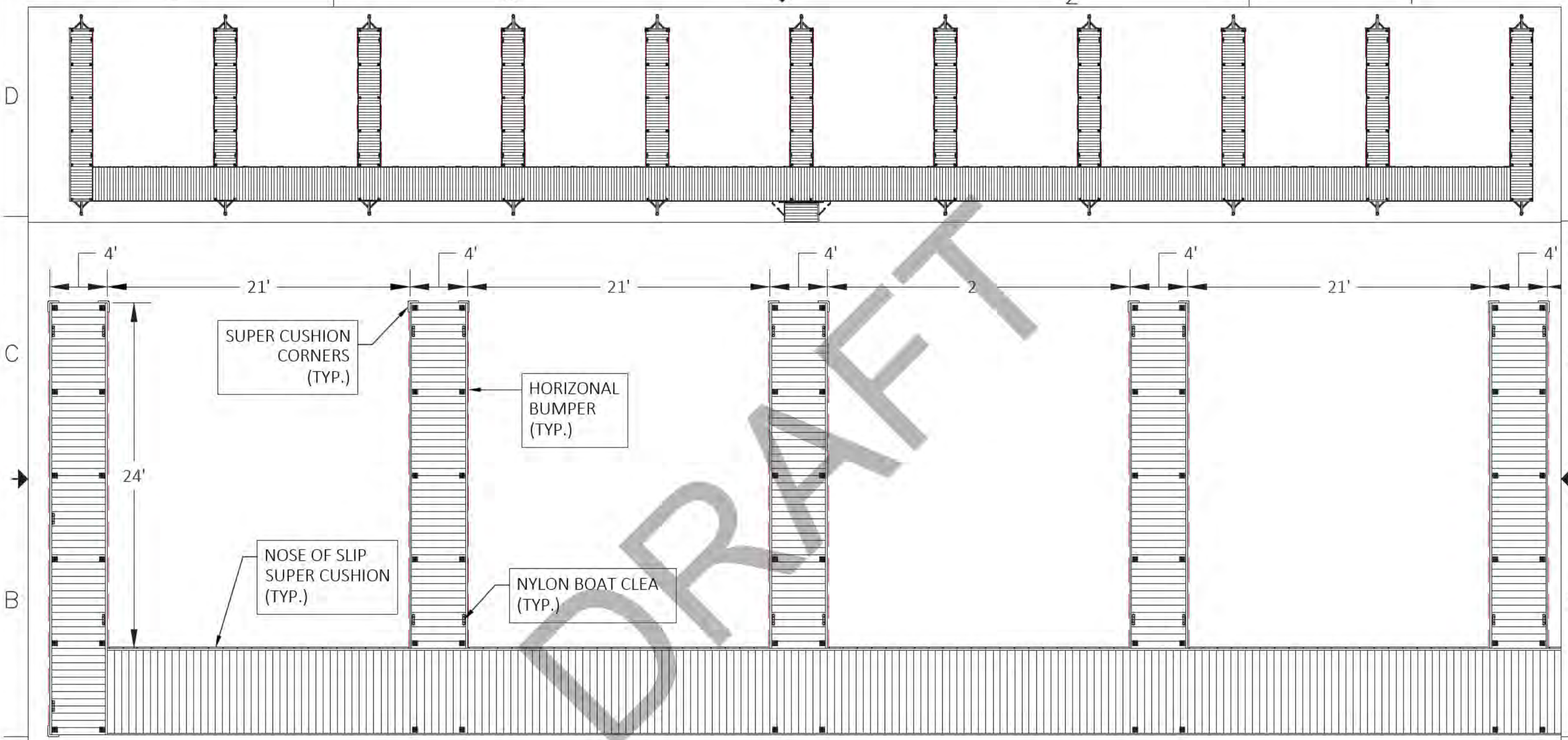


DRAFT

ACC. INCLUDE:

- (105) NOSE OF SLIP SUPER CUSHION
- (42) NYLON BOAT CLEATS
- (540') HORIZONTAL BUMPER
- (24) SUPER CUSHION CORNER BUMPERS

| -SHEET DETAIL- | | | |
|---|---|---|---|
| FILE NAME/CUSTOMER → | SHORES AT THE PENINSULA.dwg | | |
| DRAWN: 6/1/2023 | PLAN VIEW | | |
| CHECKED: | | | |
| MANAG.APPR: | | | |
| ISSUED TO: MANUFACTURE | | | |
| DESIGN DRAFTER: R.BAKER | SIZE B | SCALE 1:50 | DWG TYPE/NO. | REV 0 |
| FABRICATOR: | | | SHEET 9 OF 42 |

G:\Pictures\LOGOS\LOCATION LOGOS\LOGO.JPG

AUTOCAD .DWG

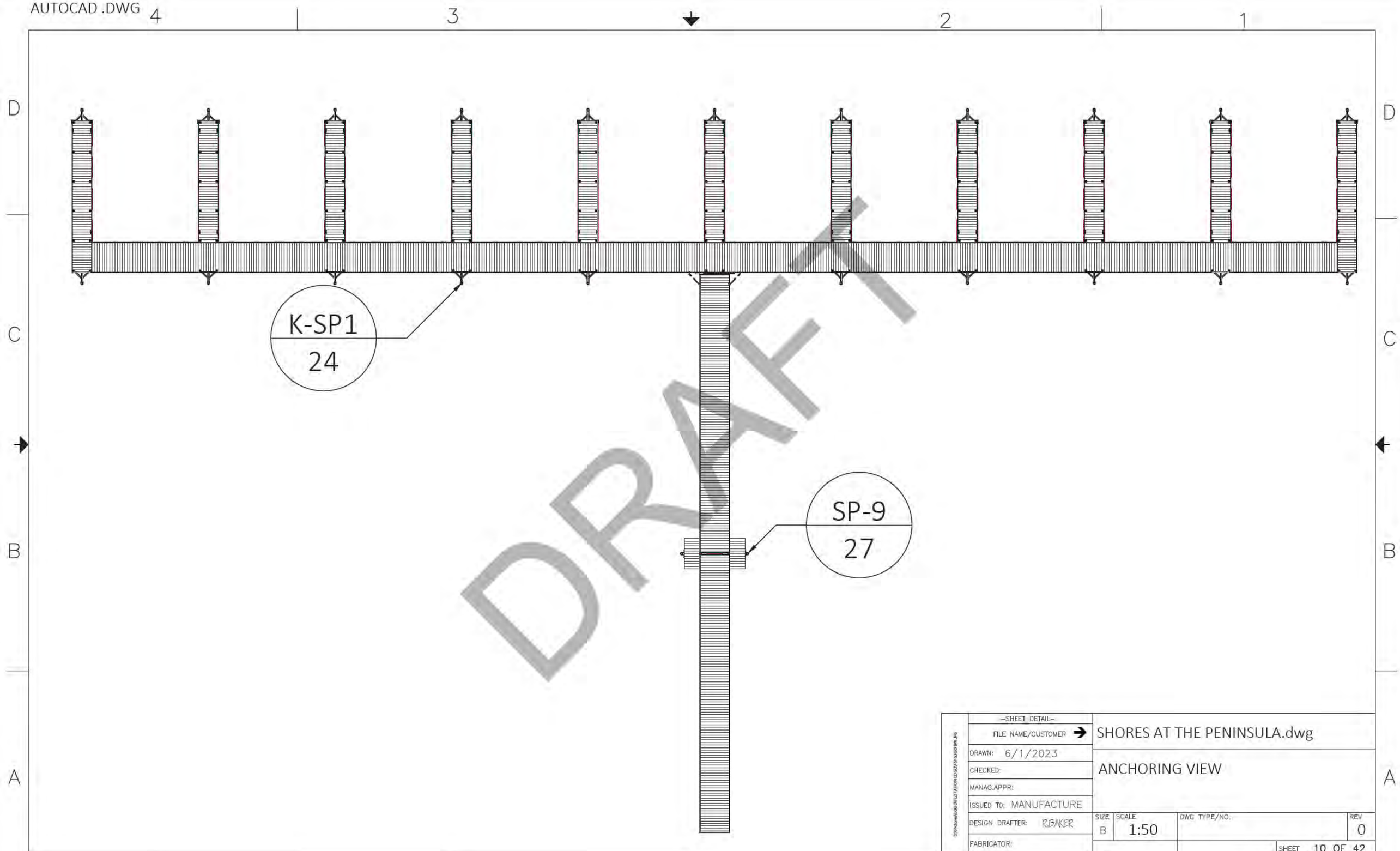


| | |
|---|---|
| —SHEET DETAIL— | |
| FILE NAME/CUSTOMER → | SHORES AT THE PENINSULA.dwg |
| DRAWN: 6/1/2023 | ANCHORING VIEW |
| CHECKED: | |
| MANAG.APPR: | |
| ISSUED TO: MANUFACTURE | |
| DESIGN DRAFTER: R.BAKER | SIZE B · SCALE 1:50 · DWG TYPE/NO. · REV 0 |
| FABRICATOR: | SHEET 10 OF 42 |

AUTOCAD .DWG

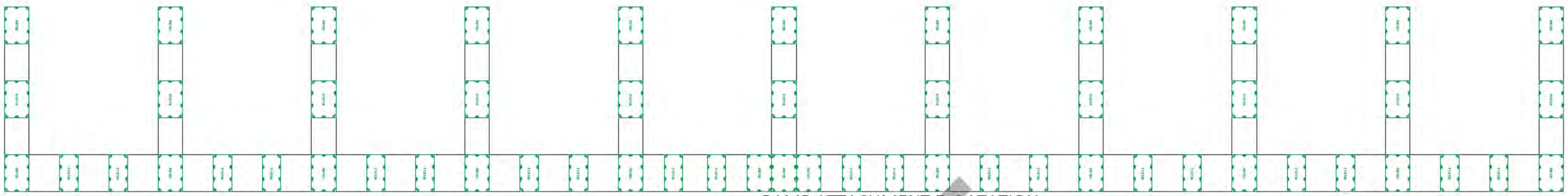

RAMP ATTACHMENT F OATATION

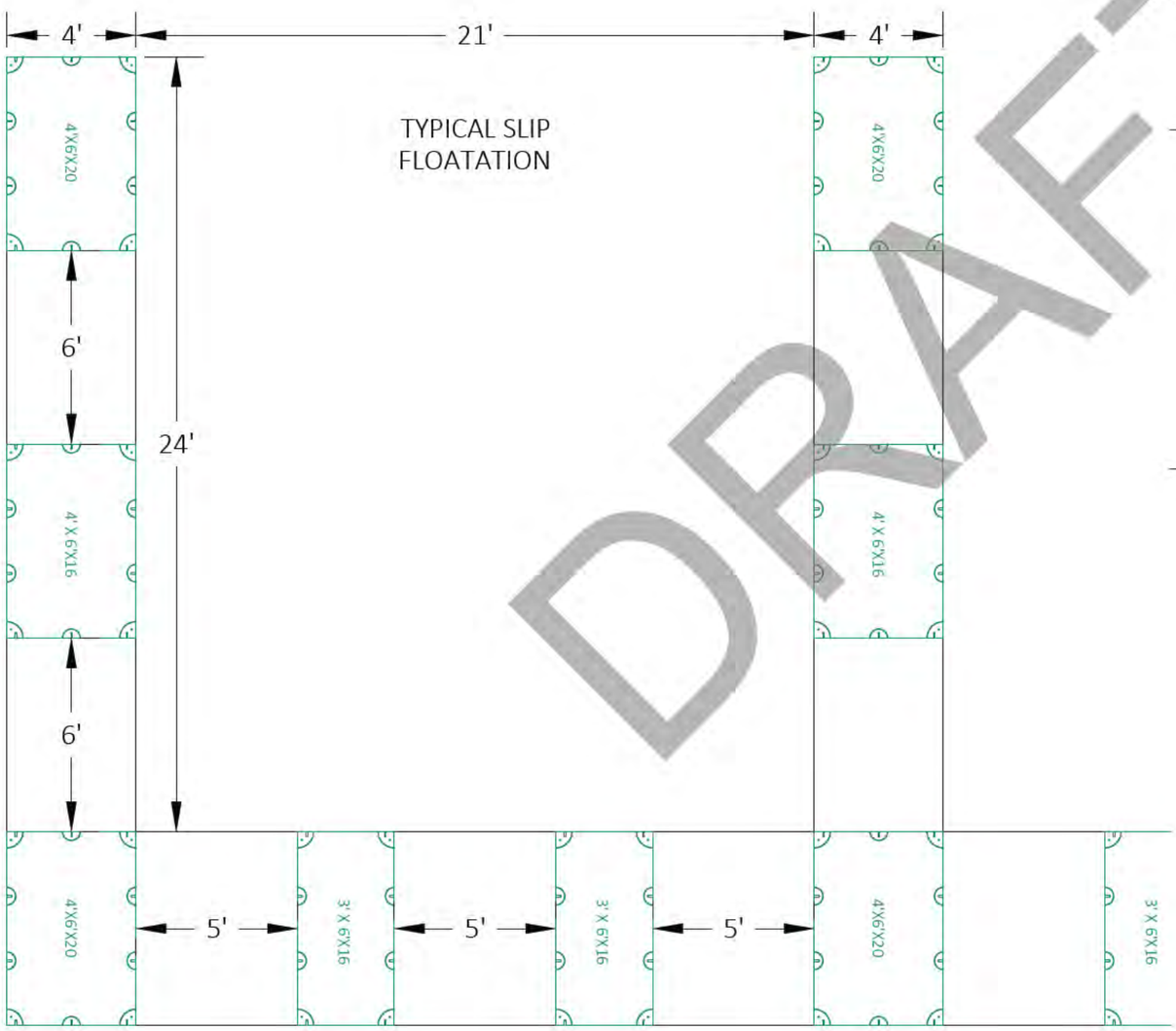


RAMP ATTACHMENT FLOATATION

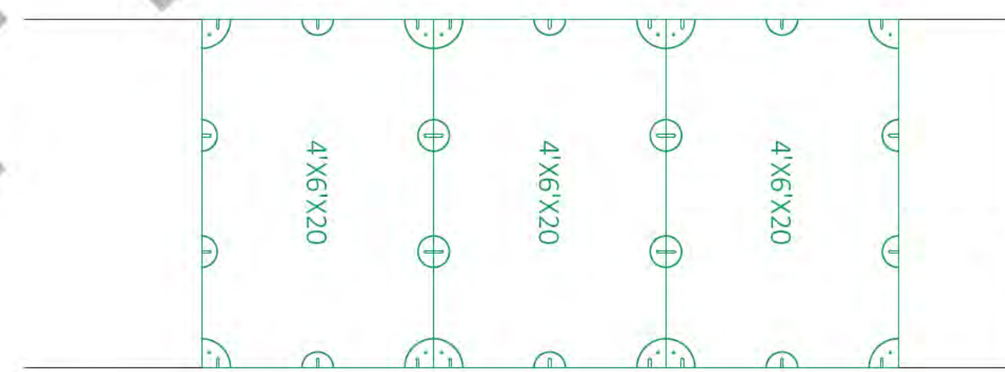


4 X 6 X16-11
4 X 6 X 20-24
3 X 6 X 16-20

DRAFT

| | | | | |
|---|---|---|---|---|
| D:\Pictures\LOGO\FLOATATION LOGO\FS\100.100.300.JPG | —SHEET DETAIL— | SHORES AT THE PENINSULA.dwg | | |
| | FILE NAME/CUSTOMER → | | | |
| | DRAWN: 6/1/2023 | FLOAT DIAGRAM | | |
| | CHECKED: | | | |
| | MANAG.APPR: | | | |
| | ISSUED TO: MANUFACTURE | | | |
| | DESIGN DRAFTER: R.BAKER | SIZE B / SCALE 1:56 | DWG TYPE/NO. | REV 0 |
| | FABRICATOR: | | | SHEET 11 OF 42 |

AUTOCAD .DWG

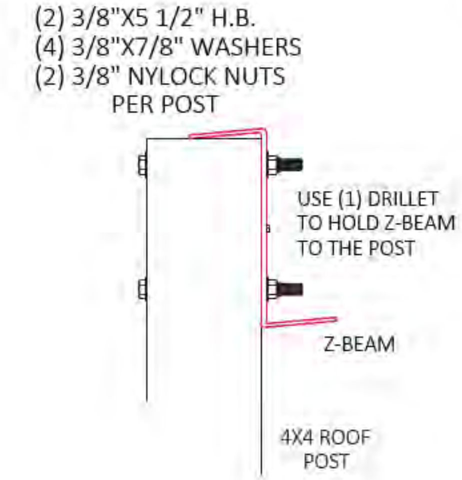


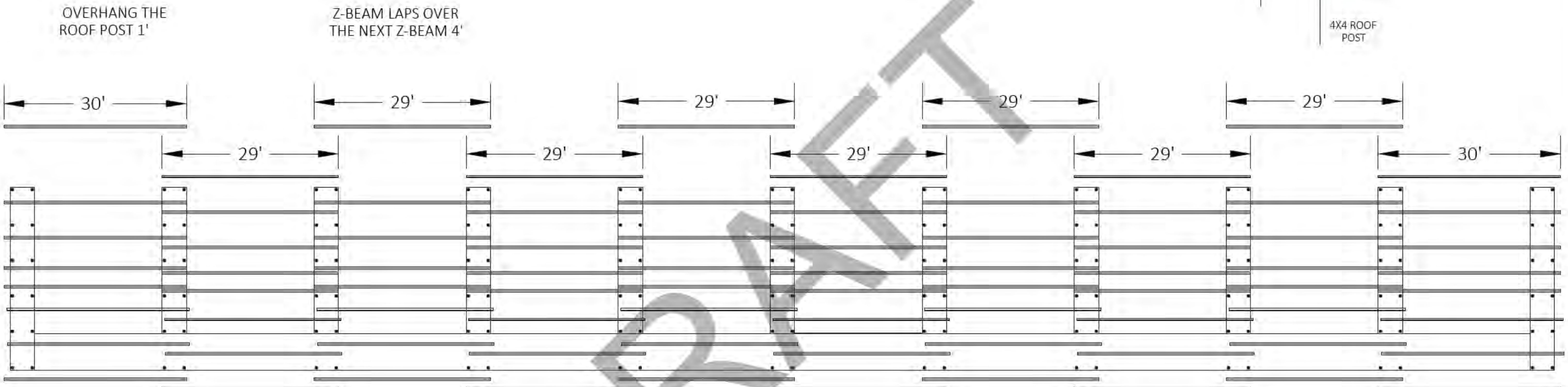


| | |
|---|---|
| –SHEET DETAIL– | |
| FILE NAME/CUSTOMER ➔ | SHORES AT THE PENINSULA.dwg |
| DRAWN: 6/1/2023 | ROOF ASSEMBLY |
| CHECKED: | |
| MANAG.APPR: | |
| ISSUED TO: MANUFACTURE | |
| DESIGN DRAFTER: R.BAKER | SIZE B · SCALE 1:180 · DWG TYPE/NO.: · REV. 0 |
| FABRICATOR: | SHEET 12 OF 42 |

AUTOCAD .DWG

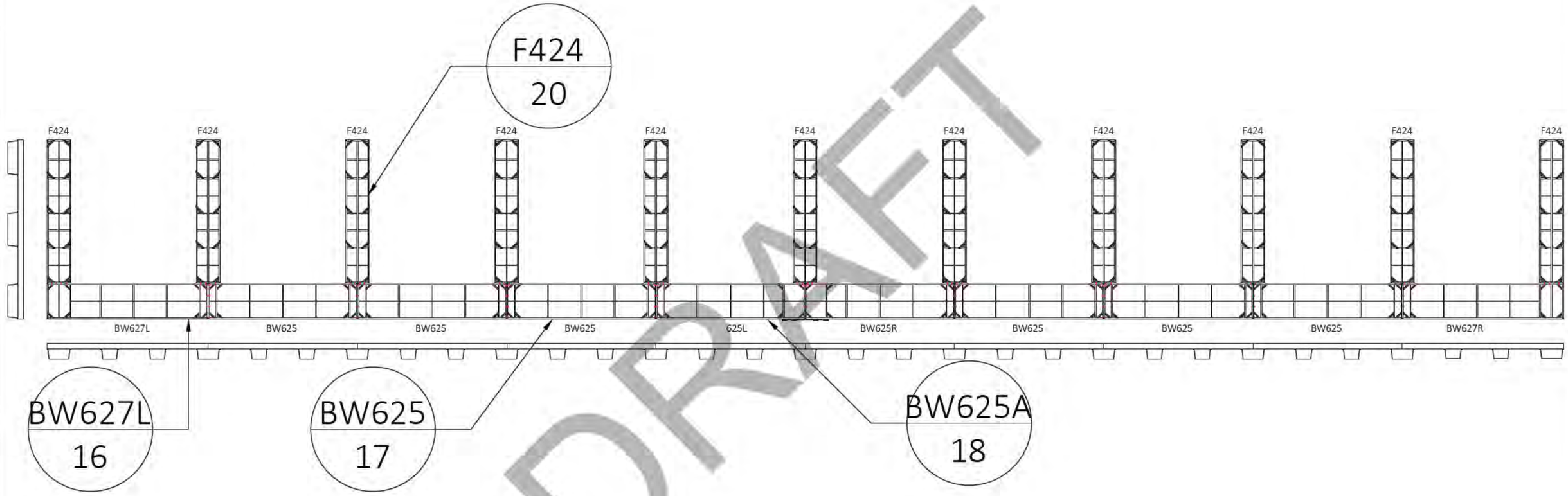


DRAFT

| | |
|---|---|
| —SHEET DETAIL— | |
| FILE NAME/CUSTOMER → | SHORES AT THE PENINSULA.dwg |
| DRAWN: 6/1/2023 | FRAME DIAGRAM |
| CHECKED: | |
| MANAG.APPR: | |
| ISSUED TO: MANUFACTURE | |
| DESIGN DRAFTER: R.BAKER | SIZE B · SCALE 1:180 · DWG TYPE/NO. · REV 0 |
| FABRICATOR: | SHEET 13 OF 42 |

AUTOCAD .DWG

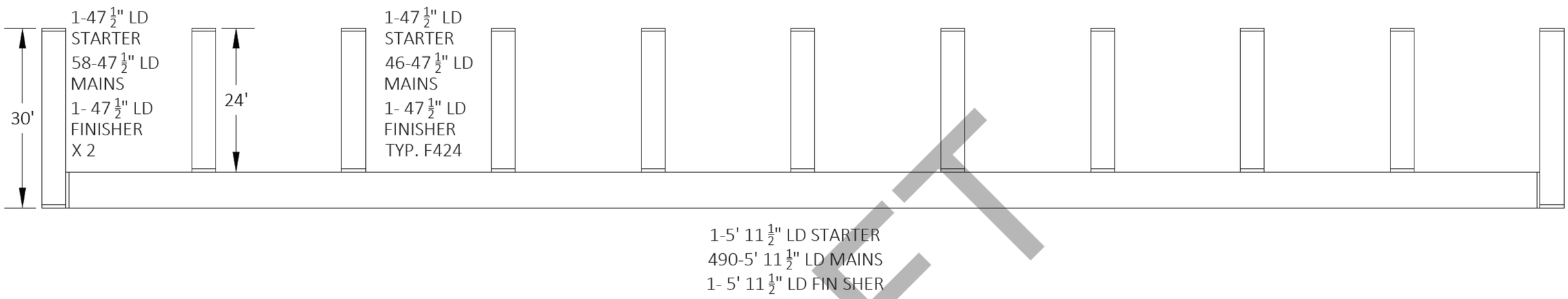


| DECKING CUT LIST | | |
|---|---|---|
| QTY. | DESCRIPTION | COLOR |
| 530 | 47-1/2" LOCKDRY MAINS | |
| 490 | 5' 11-1/2" LOCKDRY MAINS | |
| | | |
| 11 | 47-1/2" LOCKDRY STARTER | |
| 1 | 5' 11-1/2" LOCKDRY STARTER | |
| | | |
| 11 | 47-1/2" LOCKDRY FINISHER | |
| 1 | 5' 11-1/2" LOCKDRY FINISHER | |
| | | |
| | | |
| | | |
| | | |

DRAFT

D:\Pictures\LOGO\FLOTATION LOGO\FSI LOGO BW.JPG

—SHEET DETAIL—

FILE NAME/CUSTOMER → SHORES AT THE PENINSULA.dwg

DRAWN: 6/1/2023

CHECKED:

MANAG.APPR:

ISSUED TO: MANUFACTURE

DESIGN DRAFTER: R.BAKER

FABRICATOR:

DECKING DIAGRAM

| SIZE | SCALE | DWG TYPE/NO. | REV |
|---|---|---|---|
| B | 1:180 | | 0 |

SHEET 14 OF 42

AUTOCAD .DWG

| CUT/STOCK LIST | | | | | | |
|---|---|---|---|---|---|---|
| DIE NUMBER | ITEM | QTY. | DESCRIPTION | FT. | IN. | TOTAL FT. |
| FH-07803 | A | 44 | 4"X4" POST | 10 | 2 | 447.3333 |
| FH-07803 | B | 22 | 4"X4" POST | 10 | 8-1/16 | 234.7813 |
| FH-07803 | C | 22 | 4"X4" POST | 11 | 2-3/16 | 246.0104 |
| FH-07803 | D | 22 | 4"X4" POST | 11 | 2 3/8 | 246.3542 |
| FH-07803 | E | 22 | 4"X4" POST | 10 | 8 1/4 | 235.1250 |

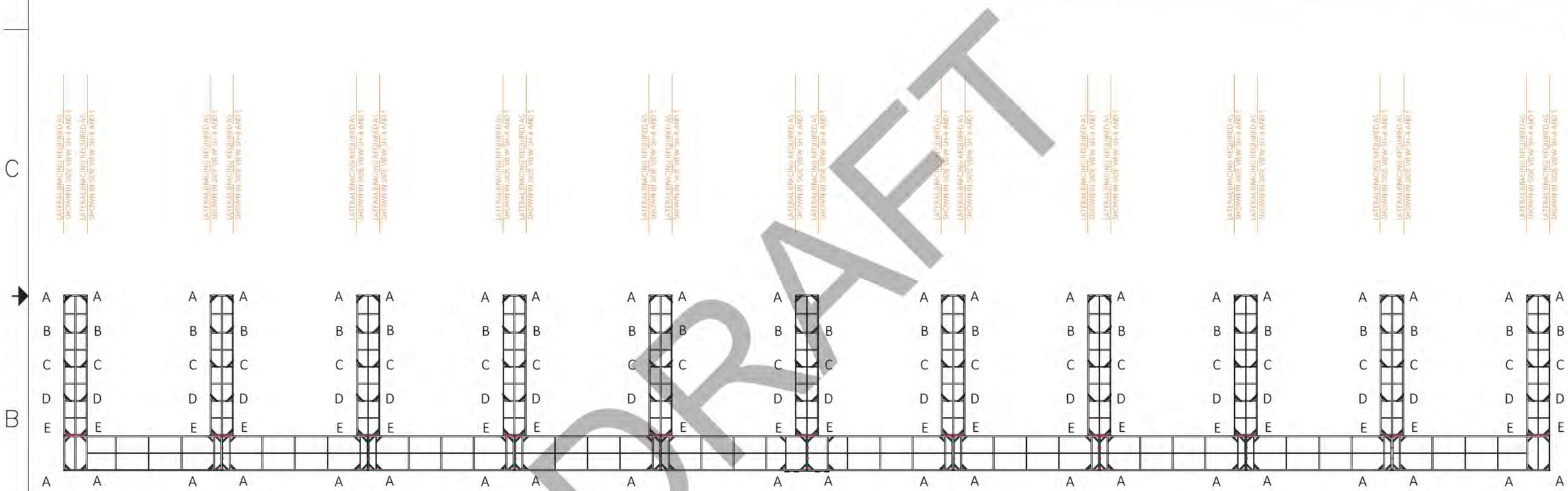


DRAFT

| | |
|---|---|
| FILE NAME/CUSTOMER | SHORES AT THE PENINSULA.dwg |
| DRAWN: 6/1/2023 | POST DIAGRAM |
| CHECKED: | |
| MANAG.APPR: | |
| ISSUED TO: MANUFACTURE | |
| DESIGN DRAFTER: R.BAKER | SIZE B · SCALE 1:180 · DWG TYPE/NO. · REV 0 |
| FABRICATOR: | SHEET 15 OF 42 |

AUTOCAD .DWG

| CUT LIST | | | | | | | |
|---|---|---|---|---|---|---|---|
| DIE NUMBER | ITEM | QTY. | DESCRIPTION | DEGREE | FT | IN | TOTAL FT |
| FS-084499 | A | 2 | 10" H.W. | 45°-45° | 27 | 0" | 54.000000 |
| FS-084499 | B | 2 | 10" H.W. | 45°-45° | 6 | 0" | 12.000000 |
| FS-084499 | C | 1 | 10" H.W. | 0°-0° | 5 | 7 1/2" | ######## |
| FS-04306 | D | 4 | 8" L.W. | 0°-0° | 5 | 7 1/2" | ######### |
| FH-07805 | E | 3 | CORNER SLEEVE | 0°-0° | | 10" | 2.500000 |
| FH-00487 | F | 16 | 1"X2" GUSSET | 45°-45° | 1 | 9 13/16" | ######### |
| FH-01356 | G | 1 | 1/8" X 2" X 2" TUBE | 0°-0° | 22 | 9 3/4" | ######### |
| FH-01356 | H | 1 | 1/8" X 2" X 2" TUBE | 0°-0° | 5 | 7 1/2" | ######## |
| FS-04774 | I | 6 | 2" X 2" ANGLE | 0°-0° | | 2" | 1.000000 |

NOTE:
.375" X 5 1/2" BOLTS WILL BE USED TO ATTACH LEFT AND RIGH BACKWALKS TOGETHER AND FINGERS TO THE BACKWALK

NOTE:
USE .375 WELD OF APPROPRIATE TYPE PER SHOP STANDARD (TYP.) OR AS NOTED

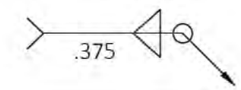


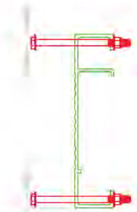

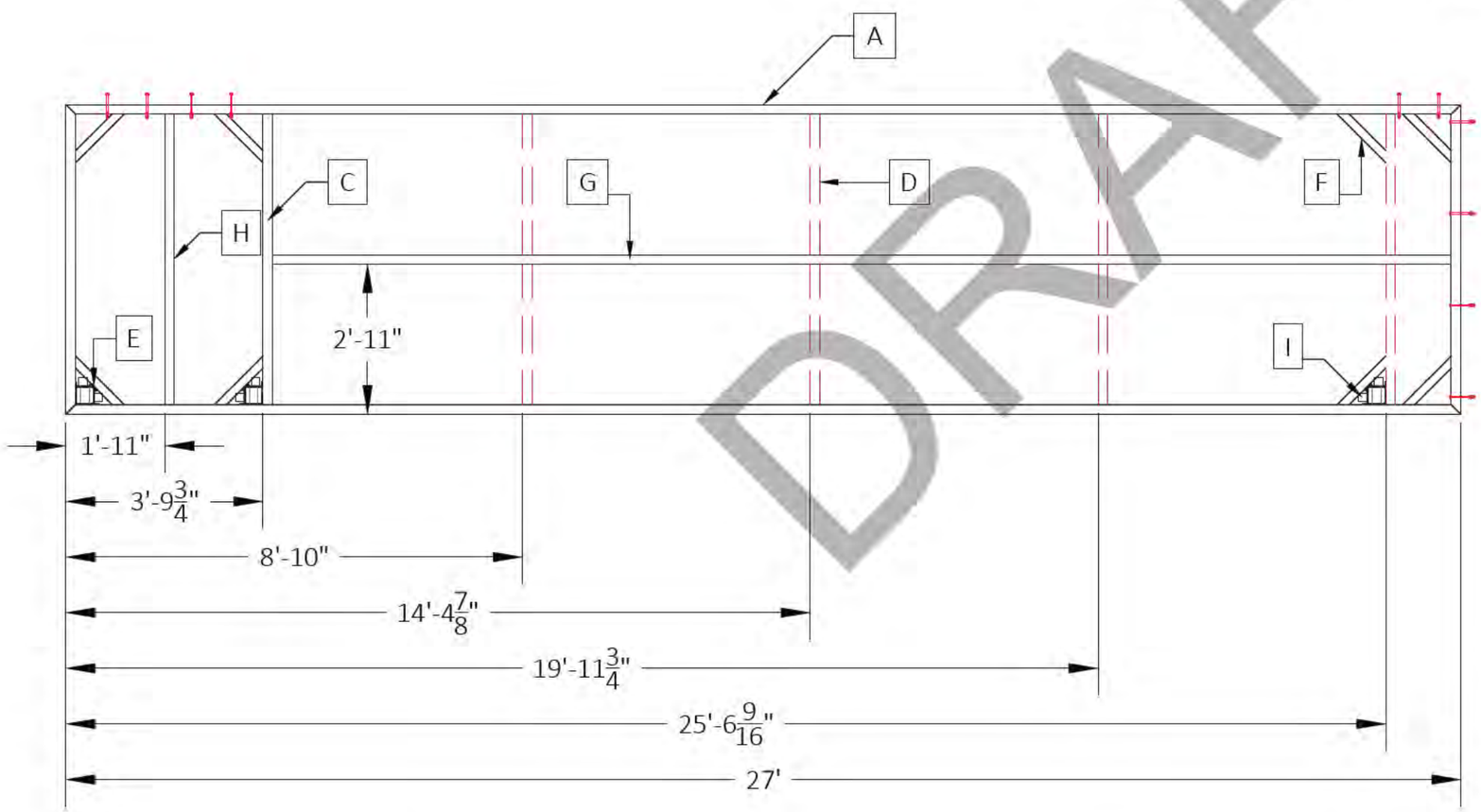


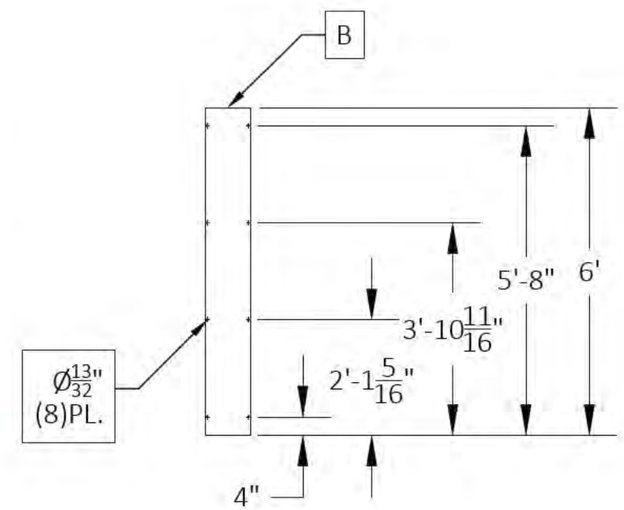


BW627L

(1)REQUIRED

DRAFT

| | | |
|---|---|---|
| —SHEET DETAIL— | | |
| FILE NAME/CUSTOMER → | SHORES AT THE PENINSULA.dwg | |
| DRAWN: 6/1/2023 | BW627L | |
| CHECKED: | | |
| MANAG.APPR: | | |
| ISSUED TO: MANUFACTURE | | |
| DESIGN DRAFTER: R.BAKER | SIZE B / SCALE 1:34 | DWG TYPE/NO. / REV 0 |
| FABRICATOR: | | SHEET 16 OF 42 |

AUTOCAD .DWG

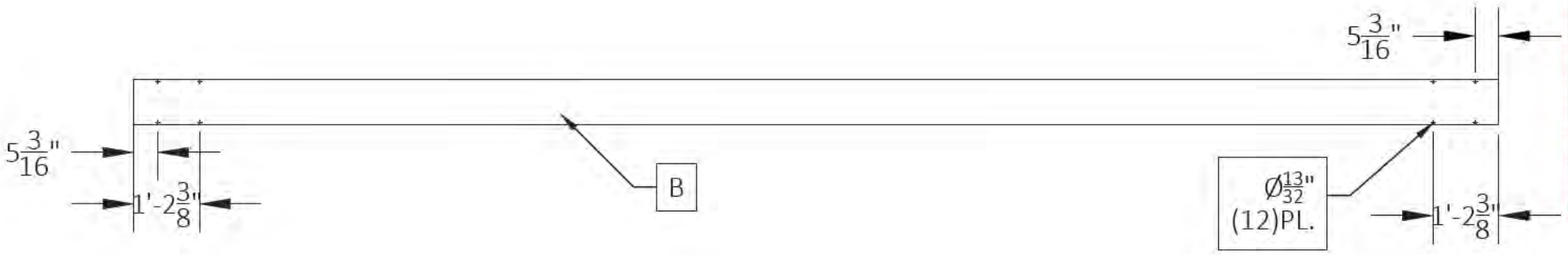


| CUT LIST | | | | | | | |
|---|---|---|---|---|---|---|---|
| DIE NUMBER | ITEM | QTY. | DESCRIPTION | DEGREE | FT | IN | TOTAL FT |
| FS-084499 | A | 2 | 10" H.W. | 45°-45° | 25 | 0" | 50.000000 |
| FS-084499 | B | 2 | 10" H.W. | 45°-45° | 6 | 0" | 12.000000 |
| FS-04306 | C | 5 | 8" L.W. | 0°-0° | 5 | 7 1/2" | ######### |
| FH-07805 | D | 2 | CORNER SLEEVE | 0°-0° | | 10" | 1.666667 |
| FH-00487 | E | 16 | 1"X2" GUSSET | 45°-45° | 1 | 9 13/16" | ######### |
| FH-01356 | F | 1 | 1/8" X 2" X 2" TUBE | 0°-0° | 24 | 7 1/2" | ######### |
| FS-04774 | G | 4 | 2" X 2" ANGLE | 0°-0° | | 2" | 0.666667 |

NOTE:
.375" X 5 1/2" BOLTS WILL BE USED TO ATTACH LEFT AND RIGH BACKWALKS TOGETHER AND FINGERS TO THE BACKWALK

NOTE:
USE .375 WELD OF APPROPRIATE TYPE PER SHOP STANDARD (TYP.) OR AS NOTED

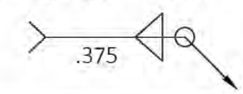


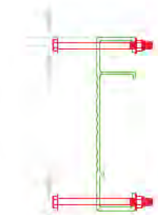

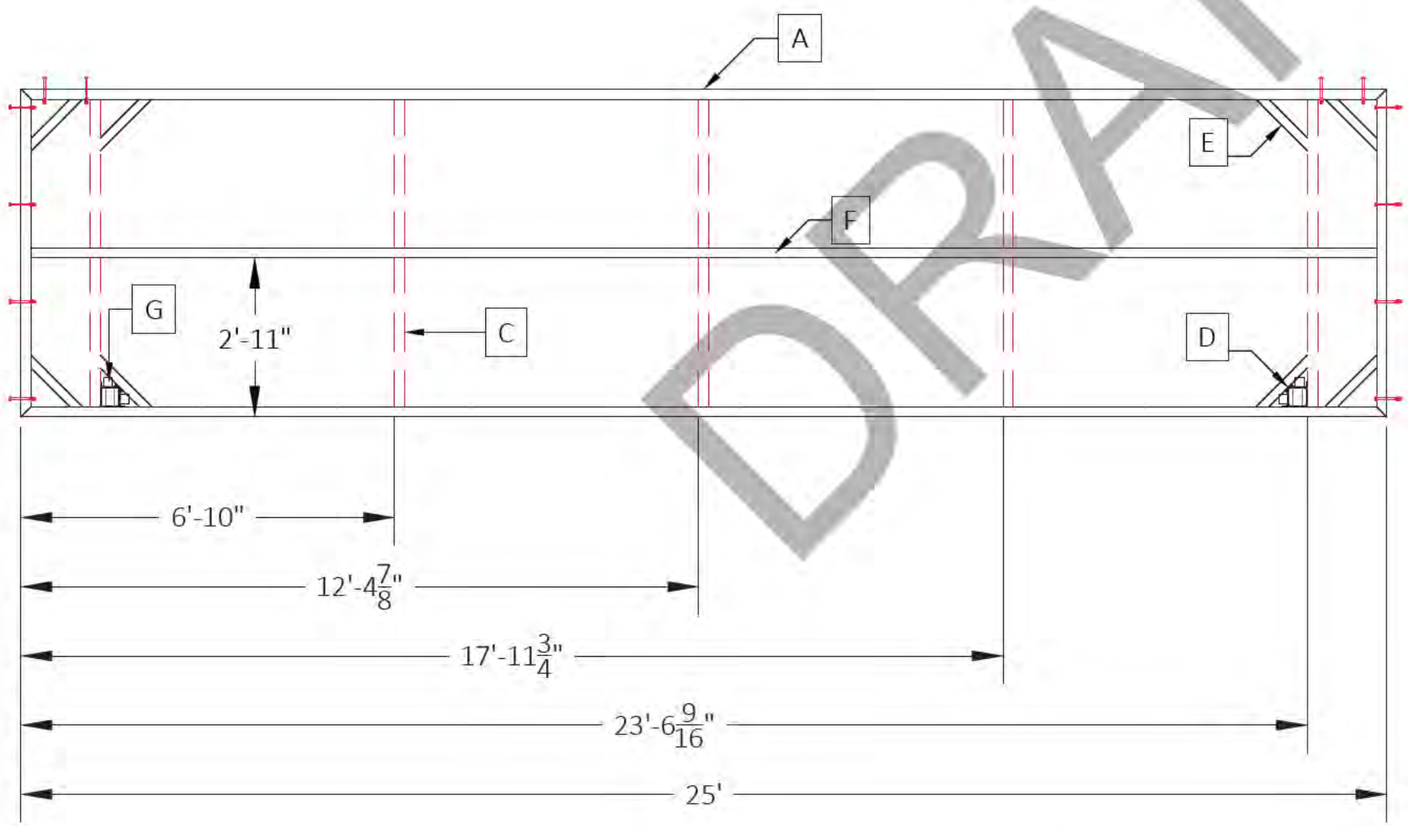


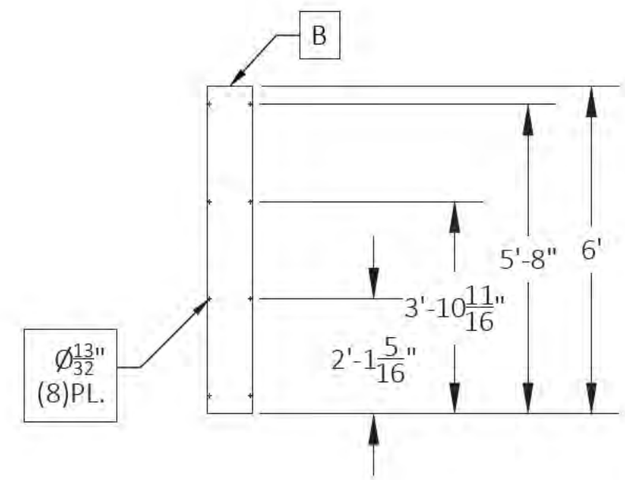


BW625

(6)REQUIRED

DRAFT

| | | |
|---|---|---|
| —SHEET DETAIL— | | |
| FILE NAME/CUSTOMER → | SHORES AT THE PENINSULA.dwg | |
| DRAWN: 6/1/2023 | BW625 | |
| CHECKED: | | |
| MANAG.APPR: | | |
| ISSUED TO: MANUFACTURE | | |
| DESIGN DRAFTER: R.BAKER | SIZE B / SCALE 1:34 | DWG TYPE/NO. / REV 0 |
| FABRICATOR: | | SHEET 17 OF 42 |

AUTOCAD .DWG

| CUT LIST | | | | | | | |
|---|---|---|---|---|---|---|---|
| DIE NUMBER | ITEM | QTY | DESCRIPTION | DEGREE | FT | IN | TOTAL FT |
| FS-084499 | A | 2 | 10" H.W. | 45°-45° | 25 | 0" | 50.000000 |
| FS-084499 | B | 2 | 10" H.W. | 45°-45° | 6 | 0" | 12.000000 |
| FS-04306 | C | 5 | 8" L.W. | 0°-0° | 5 | 7 1/2" | ######### |
| FH-07805 | D | 2 | CORNER SLEEVE | 0°-0° | | 10" | 1.666667 |
| FH-00487 | E | 16 | 1"X2" GUSSET | 45°-45° | 1 | 9 13/16" | ######### |
| FH-01356 | F | 1 | 1/8" X 2" X 2" TUBE | 0°-0° | 24 | 7 1/2" | ######### |
| FS-04774 | G | 6 | 2" X 2" ANGLE | 0°-0° | | 2" | 1.000000 |

NOTE:
.375" X 5 1/2" BOLTS WILL BE USED TO ATTACH LEFT AND RIGHT BACKWALKS TOGETHER AND FINGERS TO THE BACKWALK

NOTE:
USE .375 WELD OF APPROPRIATE TYPE PER SHOP STANDARD (TYP.) OR AS NOTED

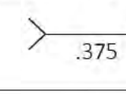

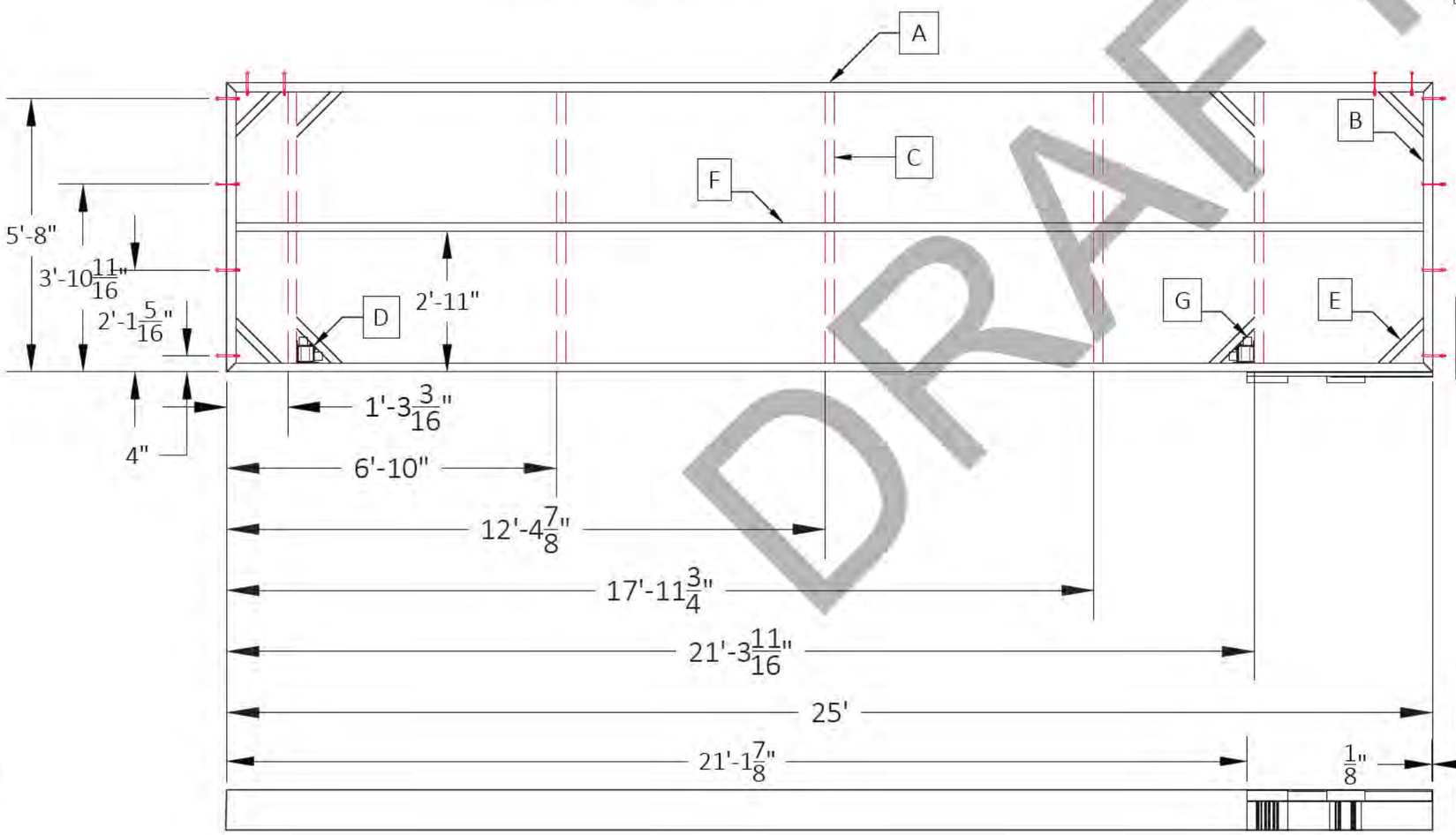


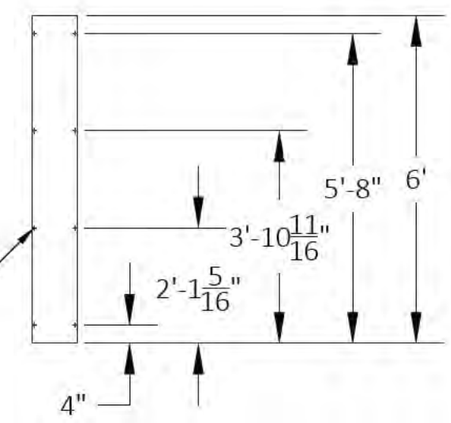


BW625L

(1)REQUIRED

DRAFT

| —SHEET DETAIL— | |
|---|---|
| FILE NAME/CUSTOMER → | SHORES AT THE PENINSULA.dwg |
| DRAWN: 6/1/2023 | BW625L |
| CHECKED: | |
| MANAG.APPR: | |
| ISSUED TO: MANUFACTURE | |
| DESIGN DRAFTER: R.BAKER | SIZE B · SCALE 1:34 · DWG TYPE/NO. · REV 0 |
| FABRICATOR: | SHEET 18 OF 42 |

D:\Pickett\Work\OTHER\BW625L.DWG

AUTOCAD .DWG

| CUT LIST | | | | | | | |
|---|---|---|---|---|---|---|---|
| DIE NUMBER | ITEM | QTY | DESCRIPTION | DEGREE | FT | IN | TOTAL FT |
| FS-084499 | A | 2 | 10" H.W. | 45°-45° | 25 | 0" | 50.000000 |
| FS-084499 | B | 2 | 10" H.W. | 45°-45° | 6 | 0" | 12.000000 |
| FS-04306 | C | 5 | 8" L.W. | 0°-0° | 5 | 7 1/2" | ######### |
| FH-07805 | D | 2 | CORNER SLEEVE | 0°-0° | | 10" | 1.666667 |
| FH-00487 | E | 16 | 1"X2" GUSSET | 45°-45° | 1 | 9 13/16" | ######### |
| FH-01356 | F | 1 | 1/8" X 2" X 2" TUBE | 0°-0° | 24 | 7 1/2" | ######### |
| FS-04774 | G | 6 | 2" X 2" ANGLE | 0°-0° | | 2" | 1.000000 |

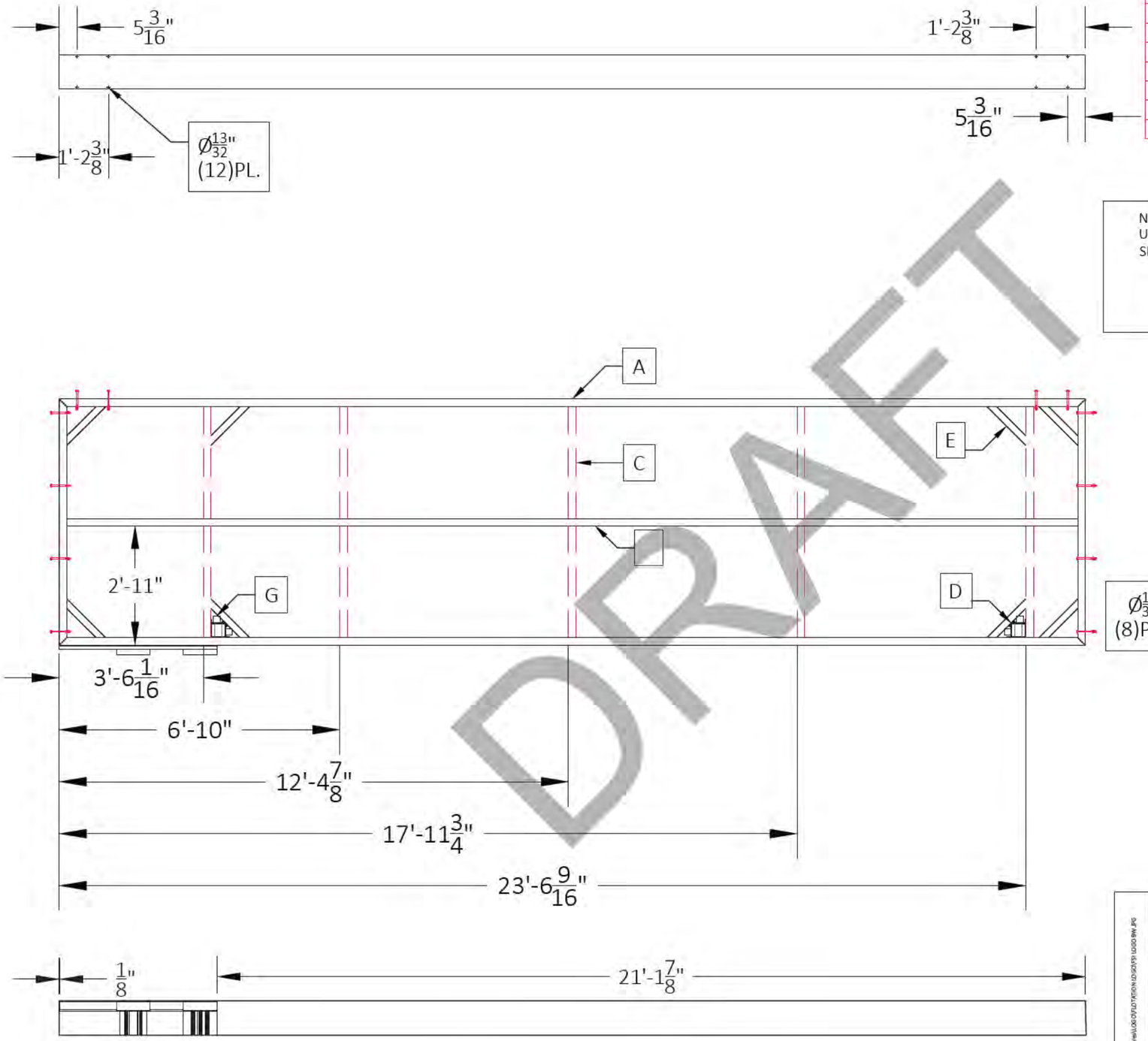


NOTE:
USE .375 WELD OF APPROPRIATE TYPE PER SHOP STANDARD (TYP.) OR AS NOTED

.375

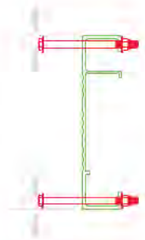

BW625L

(1)REQUIRED

DRAFT

| | | |
|---|---|---|
| —SHEET DETAIL— | | |
| FILE NAME/CUSTOMER → | SHORES AT THE PENINSULA.dwg | |
| DRAWN: 6/1/2023 | BW625R | |
| CHECKED: | | |
| MANAG.APPR: | | |
| ISSUED TO: MANUFACTURE | | |
| DESIGN DRAFTER: R.BAKER | SIZE B / SCALE 1:34 | DWG TYPE/NO. / REV 0 |
| FABRICATOR: | | SHEET 18 OF 42 |

AUTOCAD .DWG

| CUT LIST | | | | | | | |
|---|---|---|---|---|---|---|---|
| DIE NUMBER | ITEM | QTY. | DESCRIPTION | DEGREE | FT | IN | TOTAL FT |
| FH-07812 | A | 2 | RAMP PIPE | 0°-0° | | 10" | 1.67 |
| FH-07812 | B | 2 | RAMP PIPE | 0°-0° | | 9 9/16" | #### |
| FS-07813 | C | 1 | PAMP TRACK | 0°-0° | 3 | 10" | 3.83 |
| FS-08499 | D | 2 | 10" H.W. | 0°-0° | | 7" | 1.17 |
| FS-00431 | E | 2 | 8" H.W. | 0°-0° | | 7" | 1.17 |

*MEASUREMENTS MUST BE EXACT!

WELD THE RAMP TRACK TO THE FRAME!!

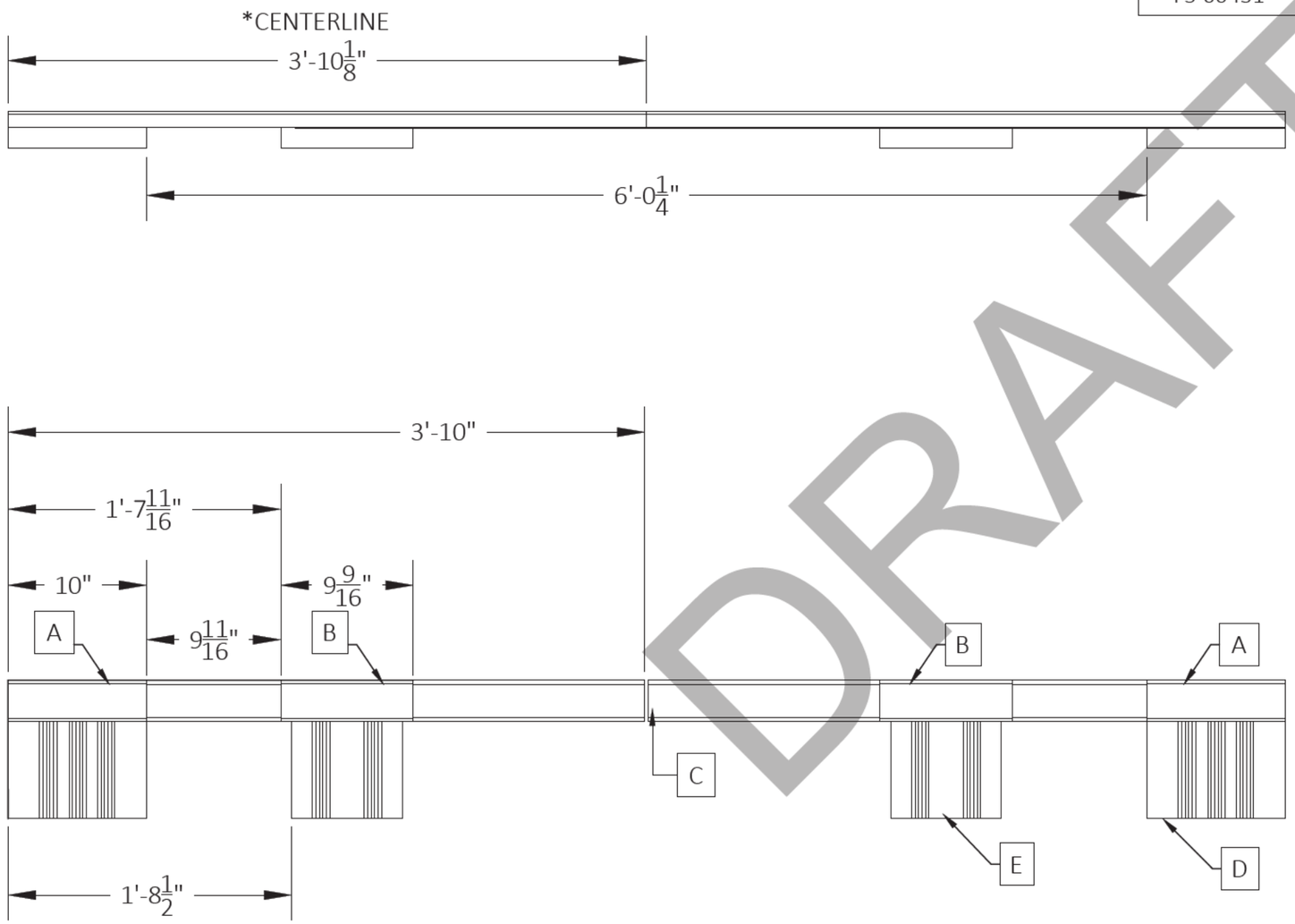


NOTE:
USE .375 WELD OF APPROPRIATE TYPE PER SHOP STANDARD (TYP.) OR AS NOTED

DRAFT

| | | |
|---|---|---|
| —SHEET DETAIL— | | |
| FILE NAME/CUSTOMER | SHORES AT THE PENINSULA.dwg | |
| DRAWN: 6/1/2023 | RA-1 | |
| CHECKED: | | |
| MANAG.APPR: | | |
| ISSUED TO: MANUFACTURE | | |
| DESIGN DRAFTER: R.BAKER | SIZE B / SCALE 1:10 | DWG TYPE/NO. / REV 0 |
| FABRICATOR: | | SHEET 19 OF 42 |

D:\Pictures\LOGO\FLOTATION LOGO\FS LOGO BW.JPG

AUTOCAD .DWG

## CUT/STOCK LIST

| DIE NUMBER | ITEM | QTY. | DESCRIPTION | DEGREE | FT. | IN. | TOTAL FT. |
|---|---|---|---|---|---|---|---|
| FS-084499 | A | 2 | 10" H.W. | 45°-45° | 24 | 0" | 48.00 |
| FS-084499 | B | 2 | 10" H.W. | 45°-45° | 4 | 0" | 8.00 |
| FS-04306 | C | 7 | 8" L.W. | 0°-0° | 3 | 7 1/2" | ##### |
| FH-07805 | D | 10 | CORNER SLEEVE | 0°-0° | | 10" | 8.33 |
| FH-00487 | E | 20 | 1"X2" GUSSET | 45°-45° | 1 | 9 13/16" | ##### |
| FH-01356 | F | 1 | 1/8" X 2" X 2" TUBE | 0°-0° | 23 | 7 1/2" | ##### |
| FS-04774 | G | 20 | 2" X 2" ANGLE | 0°-0° | | 2" | 3.33 |

HOLE PLACEMENT 1/2" INCH FROM CHANNEL EDGE ON TAB

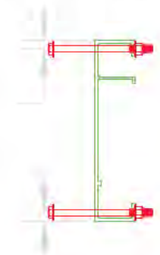

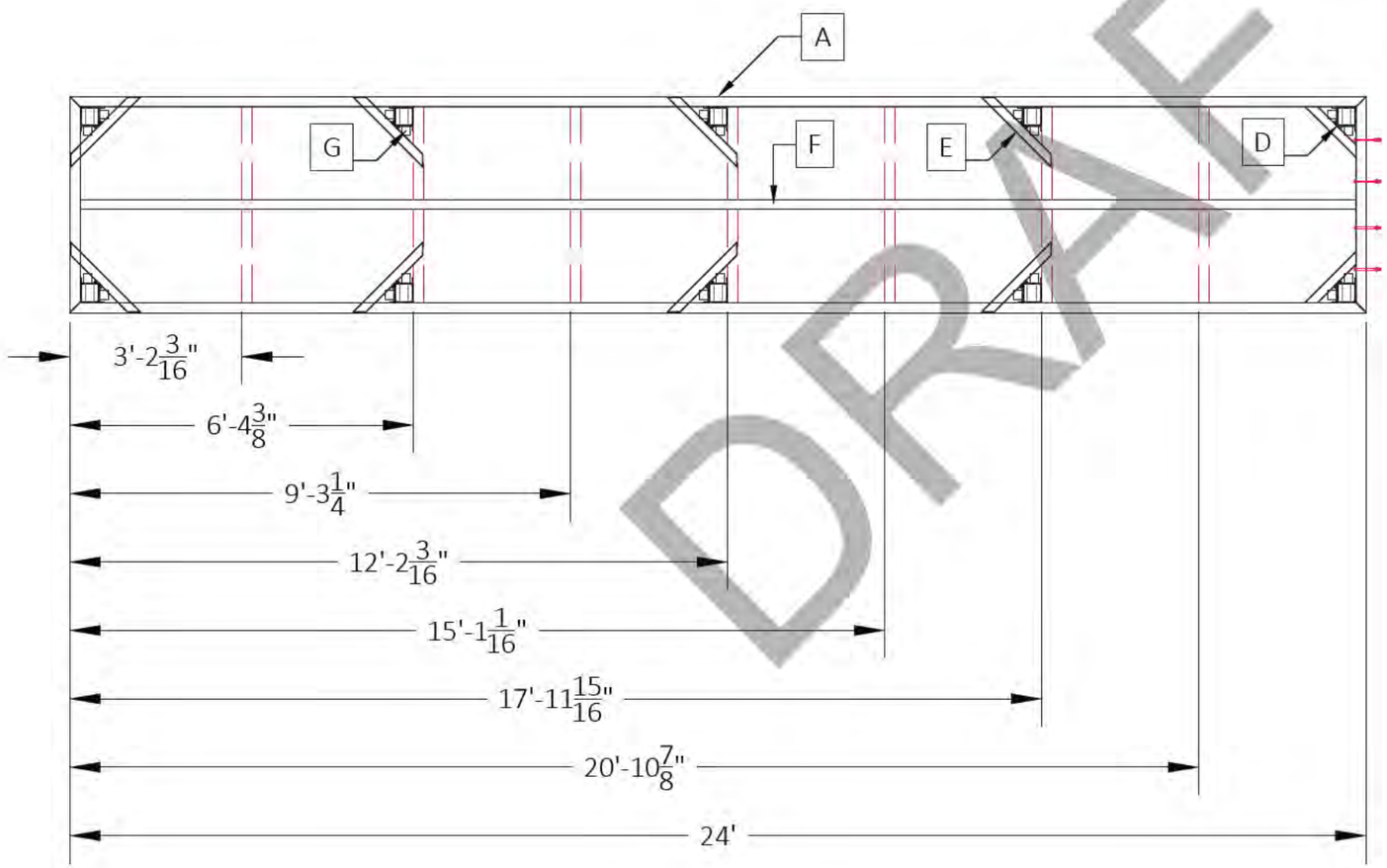


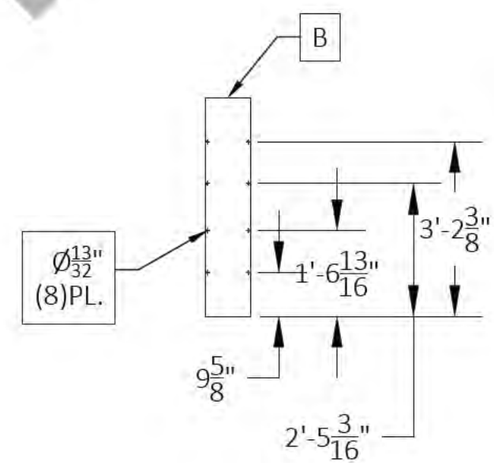


F424

(11)REQUIRED

DRAFT

| | | |
|---|---|---|
| —SHEET DETAIL— | | |
| FILE NAME/CUSTOMER → | SHORES AT THE PENINSULA.dwg | |
| DRAWN: 6/1/2023 | | |
| CHECKED: | F424 | |
| MANAG.APPR: | | |
| ISSUED TO: MANUFACTURE | | |
| DESIGN DRAFTER: R.BAKER | SIZE B / SCALE 1:34 | DWG TYPE/NO. / REV 0 |
| FABRICATOR: | | SHEET 20 OF 42 |

AUTOCAD .DWG

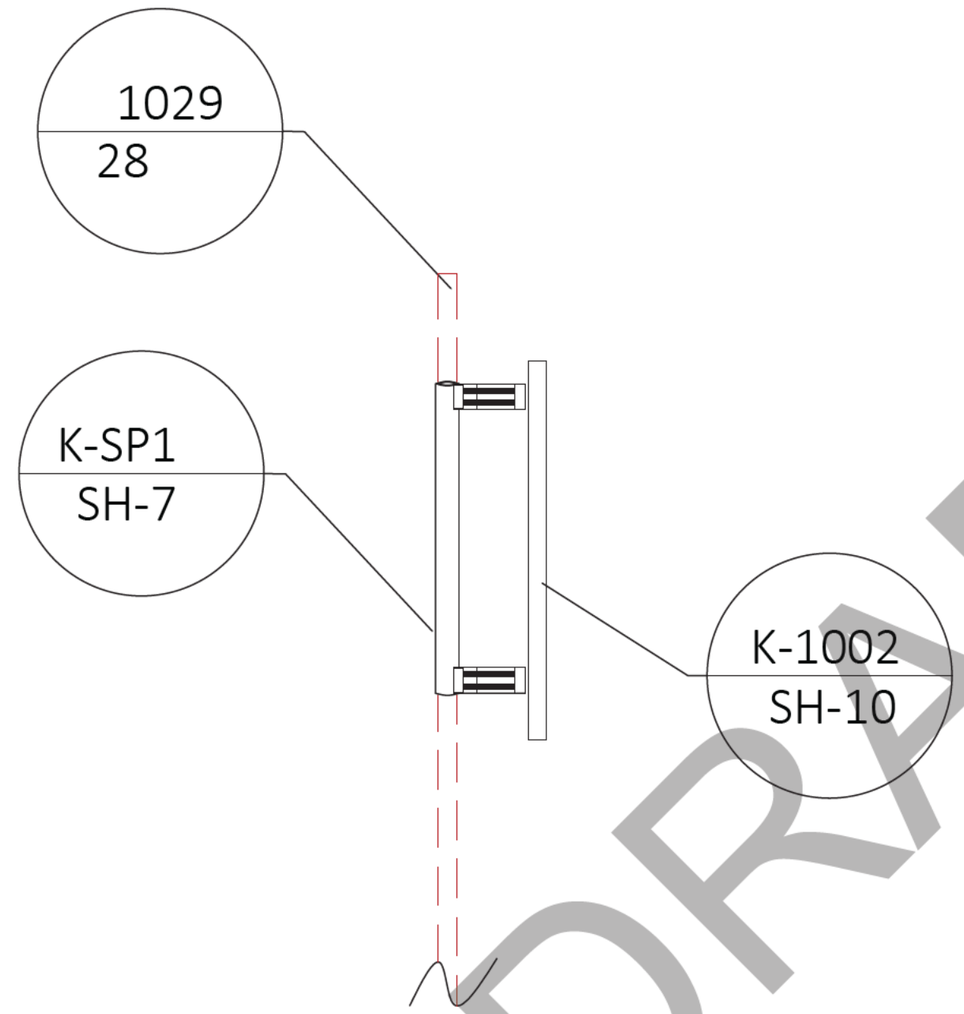


INSERT STUB-UP MATERIAL AS SHOWN IN POST TO WHICH SPUD POLE SLEEVES ATTACH. FASTEN USING A DRILLET TO HOLD IN PLACE DURING INSTALLATION.
SEE SH-3C F R SLEEVE LOCATION

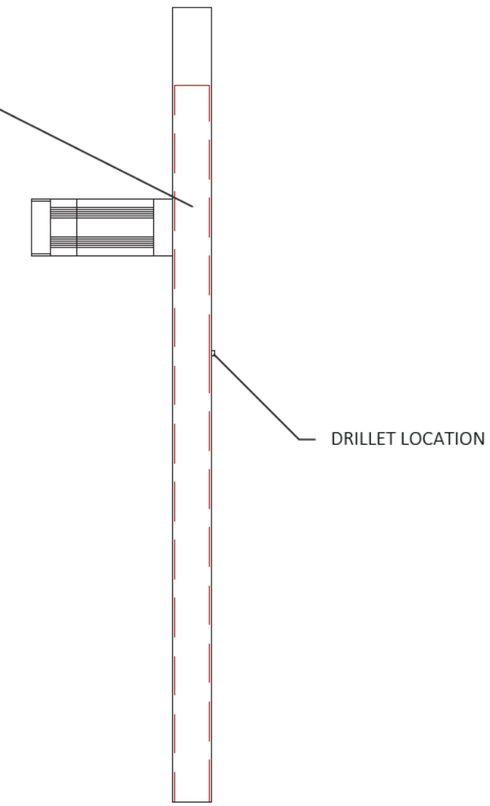


FLUSH WITH THE BOTTOM OF THE POST

DRAFT

K-SP1 ASSEMBLIES ARE TO BE BOLTED TO THE FRAMES AND POST AT THE SPECIFICALLY MARKED PLACES.

| | | |
|---|---|---|
| —SHEET DETAIL— | | |
| FILE NAME/CUSTOMER → | SHORES AT THE PENINSULA.dwg | |
| DRAWN: 6/1/2023 | 8' COLLAR SIDE VIEW | |
| CHECKED: | | |
| MANAG.APPR: | | |
| ISSUED TO: MANUFACTURE | | |
| DESIGN DRAFTER: R.BAKER | SIZE B / SCALE 1:36 | DWG TYPE/NO. / REV 0 |
| FABRICATOR: | | SHEET 21 OF 42 |

D:\Pictures\LOGO\FLOTATION LOGO\FSI LOGO BW.JPG

AUTOCAD .DWG

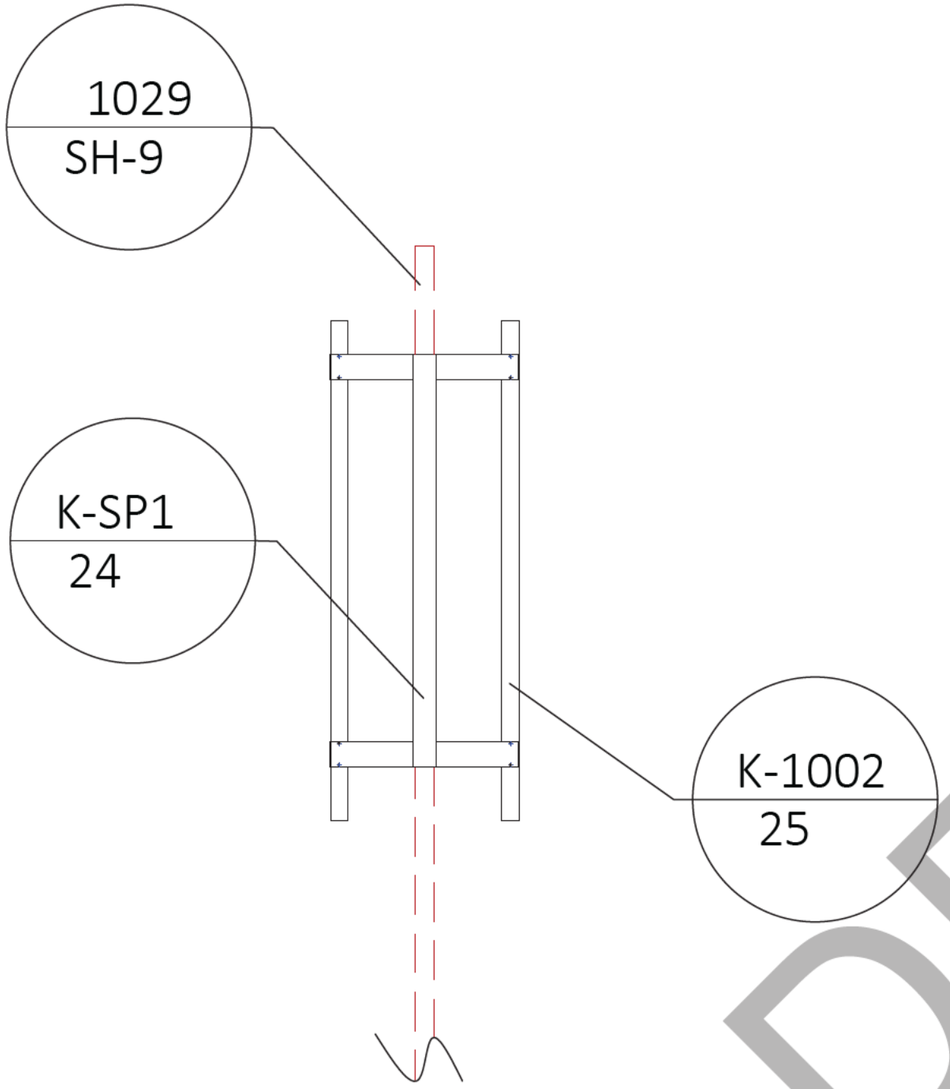


INSERT STUB-UP MATERIAL AS SHOWN IN POST TO WHICH SPUD POLE SLEEVES ATTACH. FASTEN USING A DRILLET TO HOLD IN PLACE DURING INSTALLATION.
SEE SH-3C FOR SLEEVE LOCATION

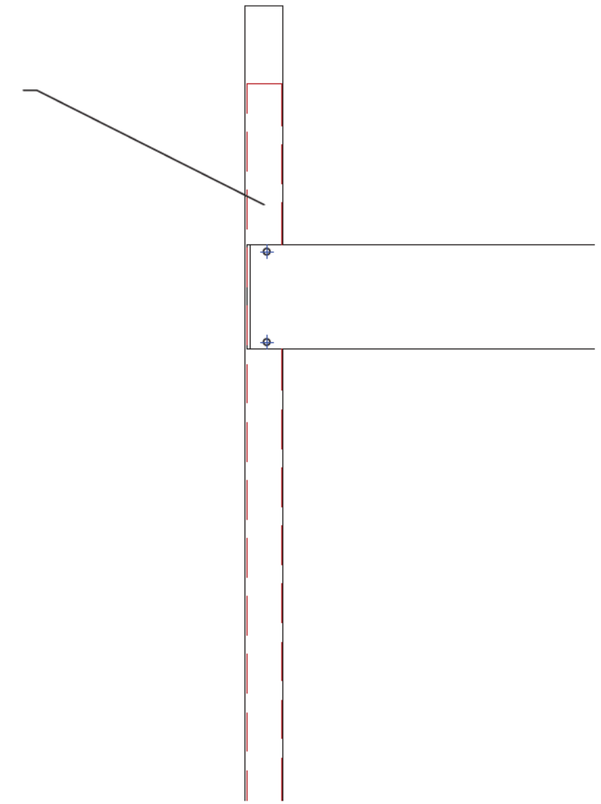

FLUSH WITH THE BOTTOM OF THE POST

DRAFT

K-SP1 ASSEMBLIES ARE TO BE BOLTED TO THE FRAMES AND POST AT THE SPECIFICALLY MARKED PLACES.

| | | |
|---|---|---|
| D:\Pictures\LOGO\FLOTATION LOGO\FSI LOGO BW.JPG | —SHEET DETAIL— | |
| | FILE NAME/CUSTOMER → | SHORES AT THE PENINSULA.dwg |
| | DRAWN: 6/1/2023 | 8' COLLAR FRONT VIEW |
| | CHECKED: | |
| | MANAG.APPR: | |
| | ISSUED TO: MANUFACTURE | |
| | DESIGN DRAFTER: R.BAKER | SIZE B · SCALE 1:36 · DWG TYPE/NO. · REV 0 |
| | FABRICATOR: | SHEET 22 OF 42 |

AUTOCAD .DWG

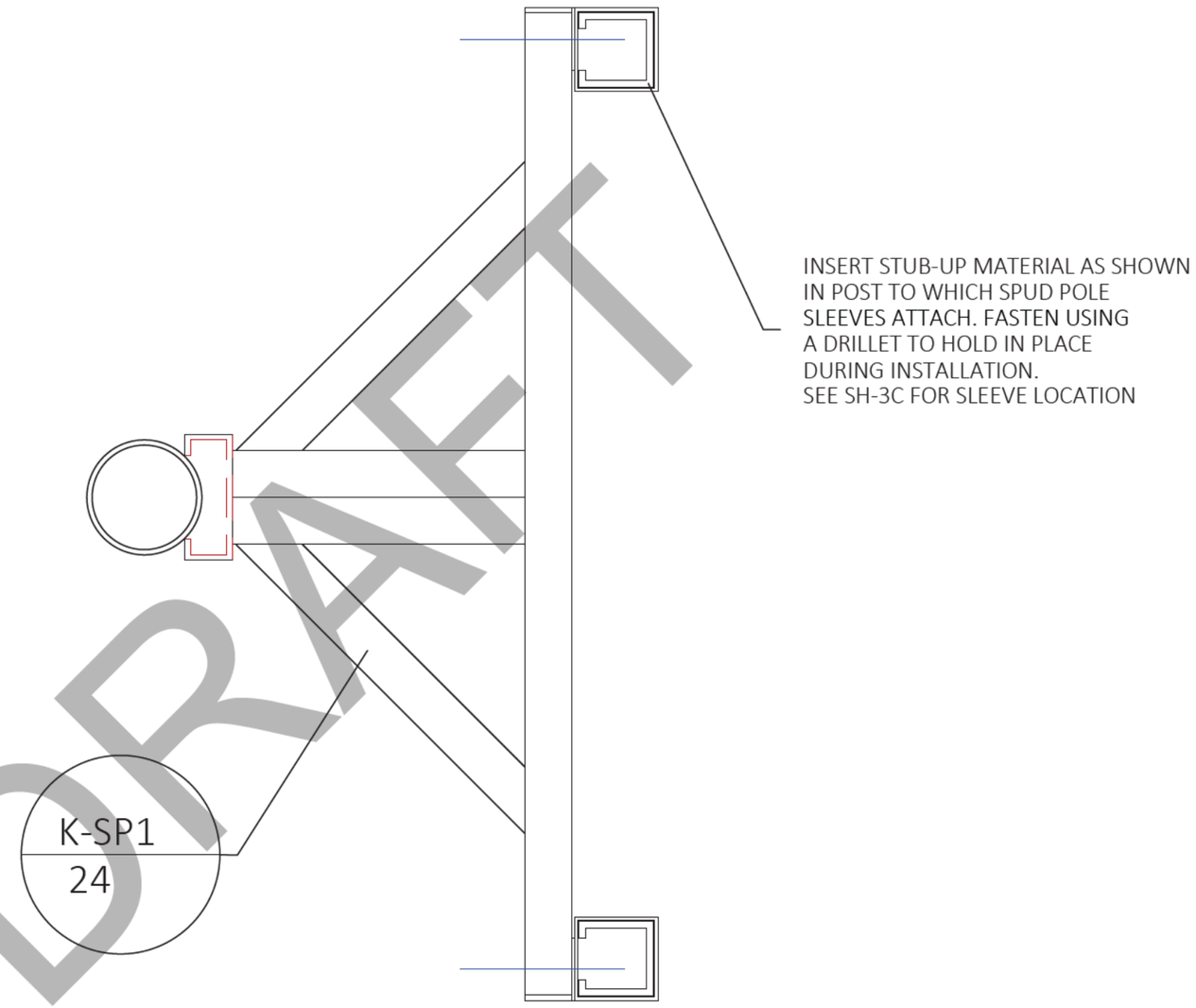


DRAFT

K-SP1 ASSEMBLIES ARE TO BE BOLTED
TO THE FRAMES AND POST AT THE
SPECIFICALLY MARKED PLACES.

| | | |
|---|---|---|
| —SHEET DETAIL— | | |
| FILE NAME/CUSTOMER | SHORES AT THE PENINSULA.dwg | |
| DRAWN: 6/1/2023 | 8' COLLAR TOP VIEW | |
| CHECKED: | | |
| MANAG.APPR: | | |
| ISSUED TO: MANUFACTURE | | |
| DESIGN DRAFTER: R.BAKER | SIZE B / SCALE 1:42 | DWG TYPE/NO. / REV 0 |
| FABRICATOR: | | SHEET 23 OF 42 |

D:\Pictures\LOGO\FLOTATION LOGO\FSI LOGO BW.JPG

AUTOCAD .DWG

| CUT/STOCK LIST | | | | | | | |
|---|---|---|---|---|---|---|---|
| DIE NUMBER | ITEM | QTY. | DESCRIPTION | DEGREE | FT. | IN. | TOTAL FT. |
| FH-04827 | A | 1 | 5" SCH. 40 ALUM PIPE | 0°-0° | 8 | 2" | 8.17 |
| FS-04739 | B | 2 | 6" H.W. | 0°-0° | | 5 1/2" | #### |
| FS-00490 | C | 4 | $\frac{1}{4}$" X 2 $\frac{1}{4}$" PRE-CUT PLATE | 0°-0° | | 6" | 2.00 |
| FS-04739 | D | 4 | 6" H.W. | 0°-0° | 1 | 10" | 7.33 |
| FS-04739 | E | 2 | 6" H.W. | 0°-0° | 3 | 6 5/8" | #### |
| FS-04739 | F | 4 | 6" H.W. | 45°-45° | 1 | 7 1/2" | #### |
| FS-00678 | G | 4 | $\frac{1}{4}$" X 6" FLAT PLATE | 0°-0° | | 2 1/4" | #### |

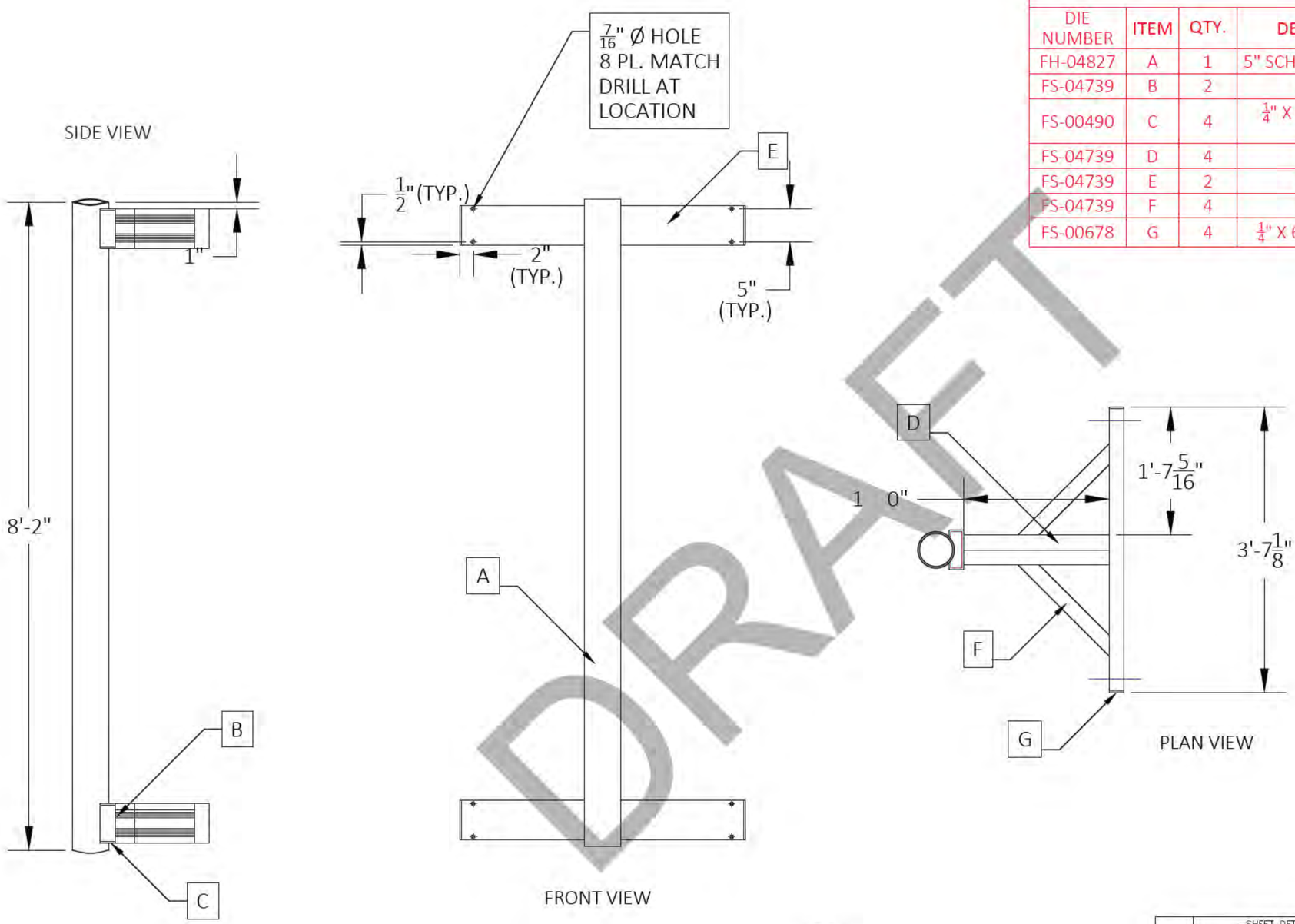


DRAFT

K-SP1

(21)REQUIRED

K-SP1 ASSEMBLIES ARE TO BE BOLTED TO THE FRAMES AND POST AT THE SPECIFICALLY MARKED PLACES.

| | | |
|---|---|---|
| —SHEET DETAIL— | | |
| FILE NAME/CUSTOMER → | SHORES AT THE PENINSULA.dwg | |
| DRAWN: 6/1/2023 | K-SP1 | |
| CHECKED: | | |
| MANAG.APPR: | | |
| ISSUED TO: MANUFACTURE | | |
| DESIGN DRAFTER: R.BAKER | SIZE B / SCALE 1:18 | DWG TYPE/NO. / REV 0 |
| FABRICATOR: | | SHEET 24 OF 42 |

AUTOCAD .DWG

## CUT/STOCK LIST

| DIE NUMBER | ITEM | QTY. | DESCRIPTION | DEGREE | FT. | IN. | TOTAL FT. |
|---|---|---|---|---|---|---|---|
| FH-07908 | A | 44 | 4" STUP UP | 0°-0° | 7 | 4 | 322.6667 |

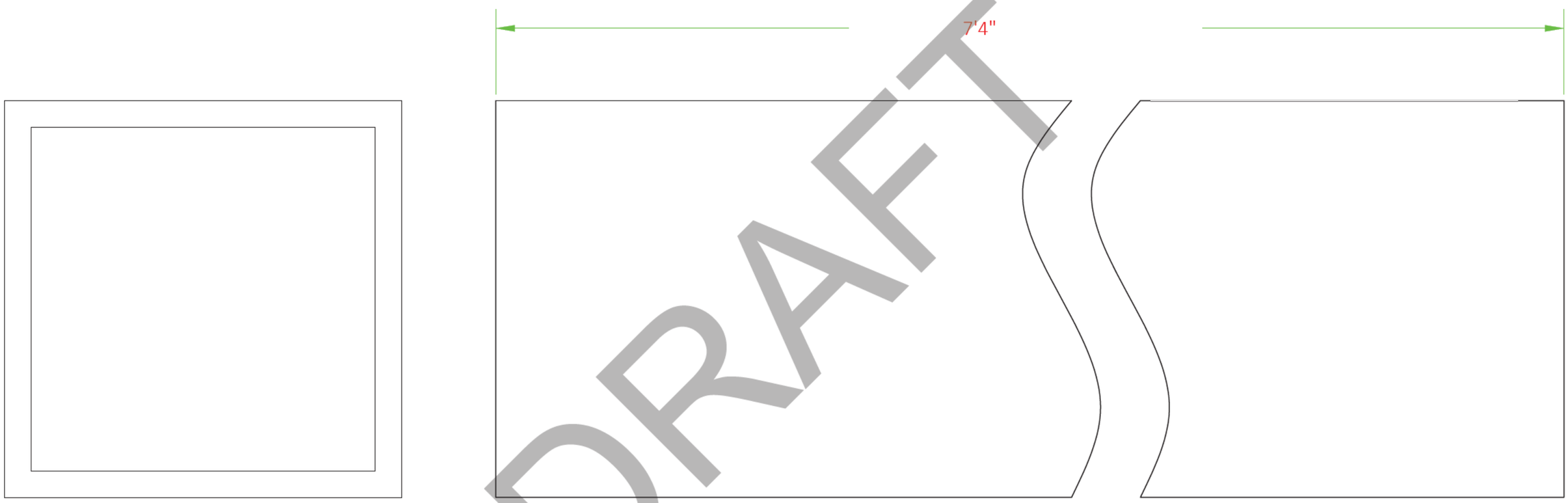


DRAFT

K-1002

| | | |
|---|---|---|
| —SHEET DETAIL— | | |
| FILE NAME/CUSTOMER | SHORES AT THE PENINSULA.dwg | |
| DRAWN: 6/1/2023 | K-1002 | |
| CHECKED: | | |
| MANAG.APPR: | | |
| ISSUED TO: MANUFACTURE | | |
| DESIGN DRAFTER: R.BAKER | SIZE B / SCALE 1:1 | DWG TYPE/NO. / REV 0 |
| FABRICATOR: | | SHEET 25 OF 42 |

D:\Pictures\LOGO\FLOTATION LOGO\FSI LOGO BW.JPG

AUTOCAD .DWG

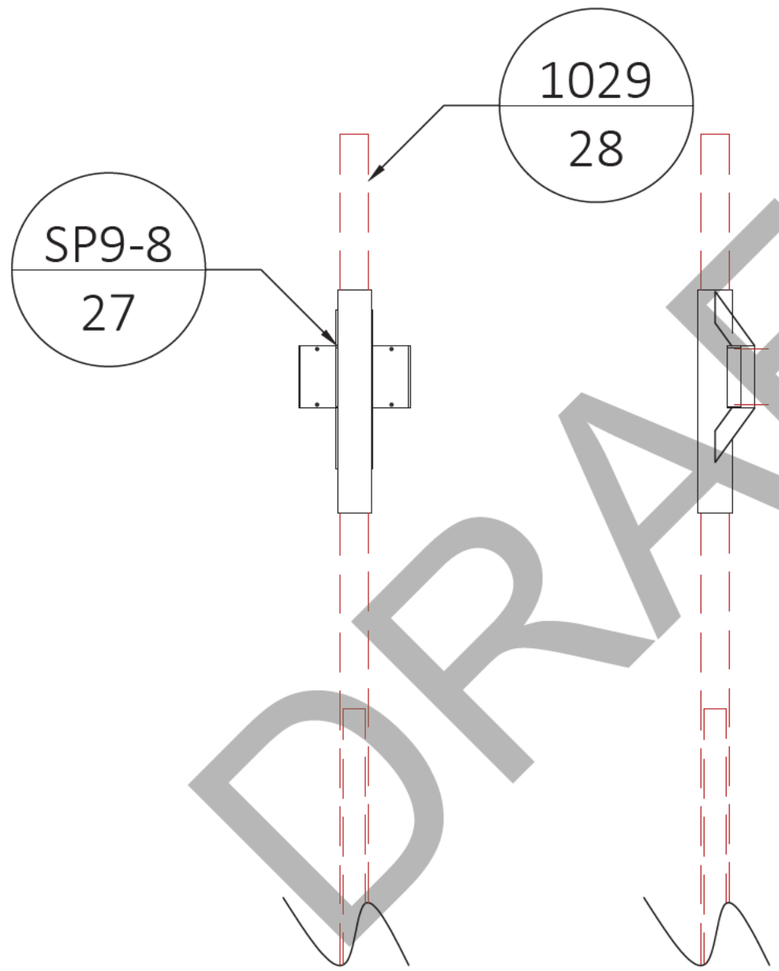


DRAFT

D:\Pictures\LOGO\FLOTATION LOGO\FSI LOGO BW.JPG

| —SHEET DETAIL— | |
|---|---|
| FILE NAME/CUSTOMER → | SHORES AT THE PENINSULA.dwg |
| DRAWN: 6/1/2023 | 3' SPUD POLE COLLAR<br>TOP AND SIDE VIEW |
| CHECKED: | |
| MANAG.APPR: | |
| ISSUED TO: MANUFACTURE | |
| DESIGN DRAFTER: R.BAKER | SIZE B · SCALE 1:25 · DWG TYPE/NO. · REV 0 |
| FABRICATOR: | SHEET 26 OF 42 |

AUTOCAD .DWG

| CUT/STOCK LIST | | | | | | | |
|---|---|---|---|---|---|---|---|
| DIE NUMBER | ITEM | QTY. | DESCRIPTION | DEGREE | FT. | IN. | TOTAL FT. |
| FH-04827 | A | 2 | 5" SCH. 40 ALUM PIPE | 0°-0° | 3 | 0 | 6.00 |
| FS08499 | B | 2 | 10" H.W. | 0°-0° | 1 | 5 1/2" | #### |
| FS-04739 | C | 2 | 6" H.W. | 0°-0° | | 9 1/2" | #### |
| FS-01990 | D | 4 | $\frac{1}{4}$" X 8" FLATPLATE | 0°-0° | | 2 1/4" | #### |
| FS-00678 | E | 4 | $\frac{1}{4}$" X6" FLATPLATE | 0°-0° | | 2 1/4" | #### |
| FS-04457 | F | 8 | $\frac{3}{8}$" X 2 $\frac{1}{4}$" FLATPLATE | L54°-L36° | | 10 7/8" | #### |

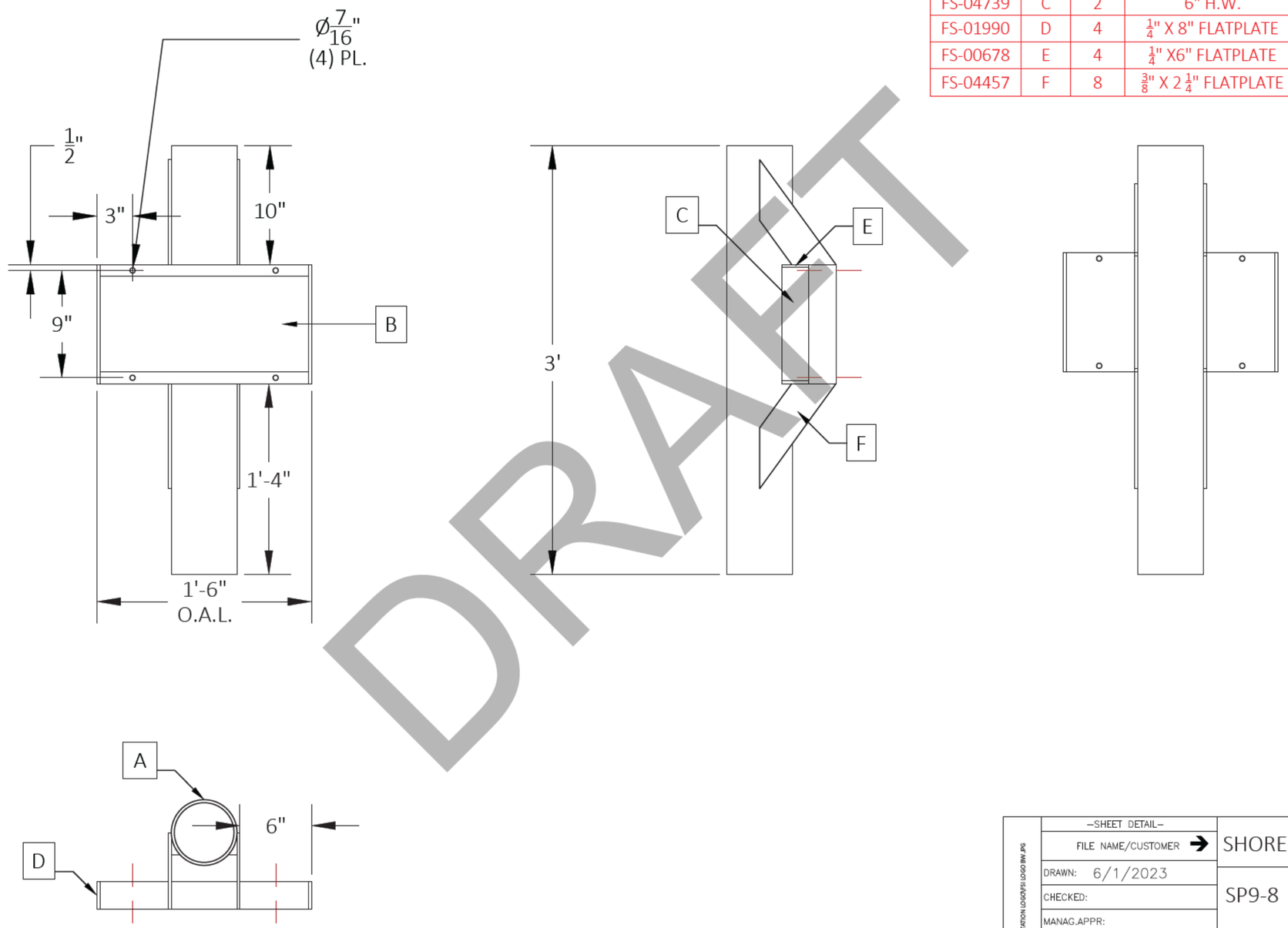


SP9–8

(2)REQUIRED

DRAFT

D:\Pictures\LOGO\FLOTATION LOGO\FSI LOGO BW.JPG

| –SHEET DETAIL– | |
|---|---|
| FILE NAME/CUSTOMER ➔ | SHORES AT THE PENINSULA.dwg |
| DRAWN: 6/1/2023 | SP9-8 |
| CHECKED: | |
| MANAG.APPR: | |
| ISSUED TO: MANUFACTURE | |
| DESIGN DRAFTER: R.BAKER | SIZE B · SCALE 1:10 · DWG TYPE/NO. · REV 0 |
| FABRICATOR: | SHEET 27 OF 42 |

AUTOCAD .DWG

| CUT/STOCK LIST | | | | | | | |
|---|---|---|---|---|---|---|---|
| DIE NUMBER | ITEM | QTY. | DESCRIPTION | DEGREE | FT. | IN. | TOTAL FT. |
| | A | 23 | 4" SCH 40 X 21' SPUD POLE | | 21 | 0 | 483.0000 |

DRAFT

1029

| | | |
|---|---|---|
| —SHEET DETAIL— | | |
| FILE NAME/CUSTOMER → | SHORES AT THE PENINSULA.dwg | |
| DRAWN: 6/1/2023 | 1029 | |
| CHECKED: | | |
| MANAG.APPR: | | |
| ISSUED TO: MANUFACTURE | | |
| DESIGN DRAFTER: R.BAKER | SIZE B / SCALE 1:18 | DWG TYPE/NO. / REV 0 |
| FABRICATOR: | | SHEET 28 OF 42 |

D:\Pictures\LOGO\FLOTATION LOGO\FSI LOGO BW.JPG

AUTOCAD .DWG

| CUT/STOCK LIST | | | | | | | |
|---|---|---|---|---|---|---|---|
| DIE NUMBER | ITEM | QTY. | DESCRIPTION | DEGREE | FT. | IN. | TOTAL FT. |
| FH-01356 | A | 1 | 1/8" X 2" X 2" TUBE | 0°-0° | 20 | 8 7/8 | 20.739583 |
| FH-01356 | B | 4 | 1/8" X 2" X 2" TUBE | 0°-0° | 4 | 8 3/4 | 18.916667 |
| FH-01356 | C | 5 | 1/8" X 2" X 2" TUBE | 0°-0° | 4 | 3 | 21.250000 |
| FH-01 56 | D | 2 | 1/8" X 2" X 2" TUBE | 45°-45° | 1 | 11 | 3.833333 |
| F 356 | E | 2 | 1/8" X 2" X 2" TUBE | 0°-45° | | 6 | 1.000000 |

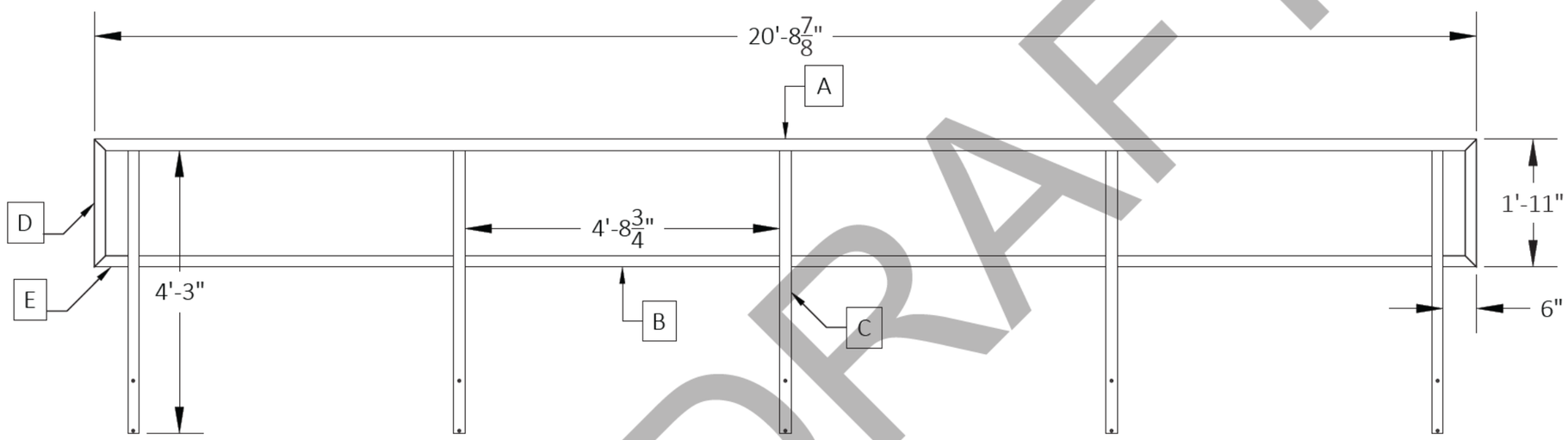


DRAFT

SP1

(8)REQUIRED

| | | |
|---|---|---|
| D:\Pictures\LOGO\FLOTATION LOGO\FPI LOGO BW.JPG | —SHEET DETAIL— | |
| | FILE NAME/CUSTOMER → | SHORES AT THE PENINSULA.dwg |
| | DRAWN: 6/1/2023 | |
| | CHECKED: | SP-1 |
| | MANAG.APPR: | |
| | ISSUED TO: MANUFACTURE | |
| | DESIGN DRAFTER: R.BAKER | SIZE B / SCALE 1:24 / DWG TYPE/NO. / REV 0 |
| | FABRICATOR: | SHEET 29 OF 42 |

AUTOCAD .DWG

## CUT/STOCK LIST

| DIE NUMBER | ITEM | QTY. | DESCRIPTION | DEGREE | FT. | IN. | TOTAL FT. |
|---|---|---|---|---|---|---|---|
| FH-01356 | A | 1 | 1/8" X 2" X 2" TUBE | 0°-0° | 18 | 9 15/16 | 18.828125 |
| FH-01356 | B | 3 | 1/8" X 2" X 2" TUBE | 0°-0° | 5 | 8 | 17.000000 |
| FH-01356 | C | 4 | 1/8" X 2" X 2" TUBE | 0°-0° | 4 | 3 | 17.000000 |
| FH-01356 | D | 2 | 1/8" X 2" X 2" TUBE | 45°-45° | 1 | 11 | 3.833333 |
| FH-01356 | E | 2 | 1/8" X 2" X 2" TUBE | 0°-45° | | 7 | 1.166667 |

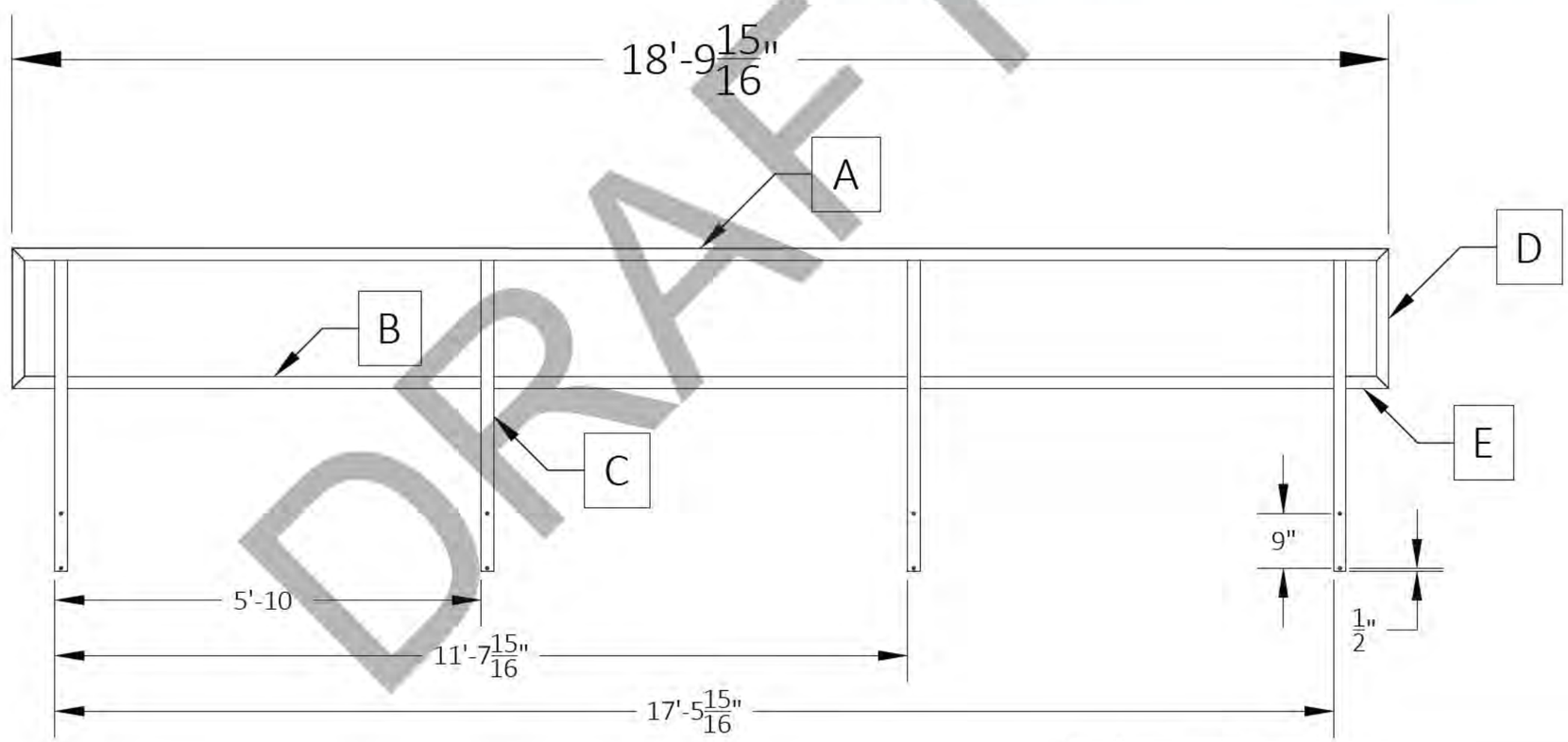


SP2

(2)REQUIRED

DRAFT

| | |
|---|---|
| —SHEET DETAIL— | |
| FILE NAME/CUSTOMER → | SHORES AT THE PENINSULA.dwg |
| DRAWN: 6/1/2023 | SP-2 |
| CHECKED: | |
| MANAG.APPR: | |
| ISSUED TO: MANUFACTURE | |
| DESIGN DRAFTER: R.BAKER | SIZE B · SCALE 1:24 · DWG TYPE/NO. · REV 0 |
| FABRICATOR: | SHEET 30 OF 42 |

D:\Pictures\LOGO\QUOTATION LOGO\PS LOGO.BMP

AUTOCAD .DWG

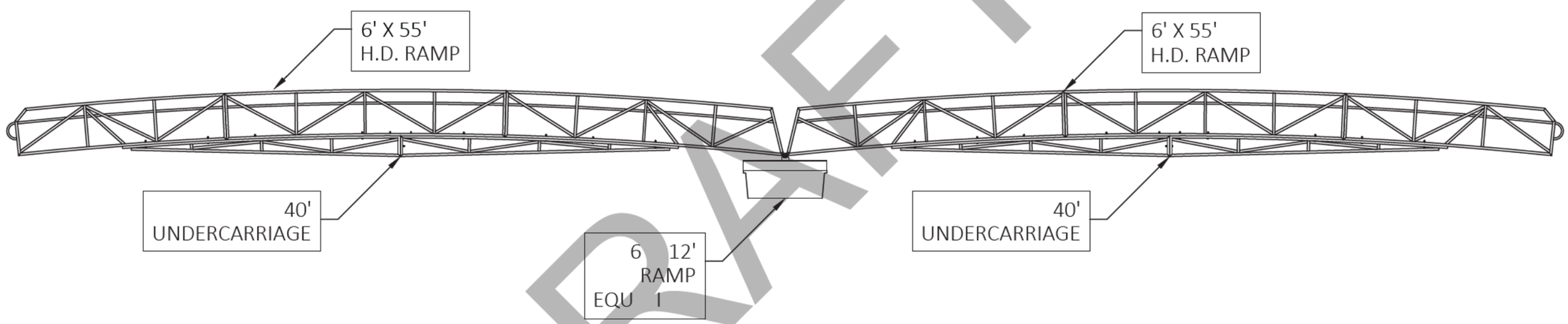


DRAFT

D:\Pictures\LOGO\FULLOTATION LOGO\FS1 LOGO BW.JPG

—SHEET DETAIL—

FILE NAME/CUSTOMER → SHORES AT THE PENINSULA.dwg

DRAWN: 6/1/2023

CHECKED:

MANAG.APPR:

ISSUED TO: MANUFACTURE

DESIGN DRAFTER: R.BAKER

FABRICATOR:

(2) 6' X 55' RAMPS W/ EQUALIZER
SIDE VIEW

| SIZE | SCALE | DWG TYPE/NO. | REV |
|---|---|---|---|
| B | 1:100 | | 0 |

SHEET 31 OF 42

AUTOCAD .DWG

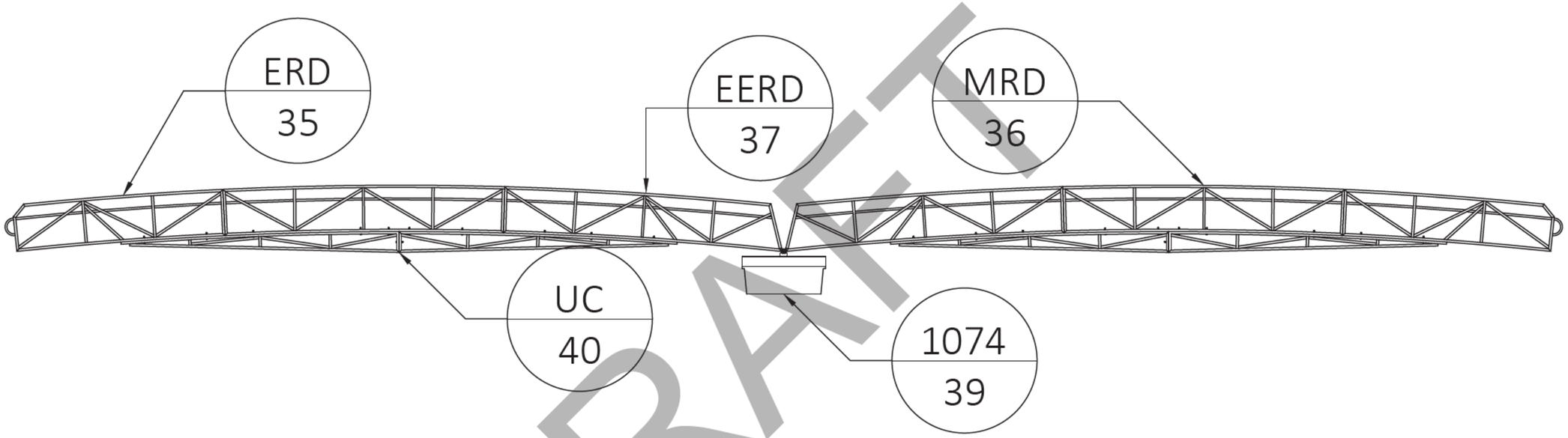


DRAFT

| | | |
|---|---|---|
| D:\Pictures\LOGO\FLOTATION LOGO\FSI LOGO BW.JPG | —SHEET DETAIL— | |
| | FILE NAME/CUSTOMER ➔ | SHORES AT THE PENINSULA.dwg |
| | DRAWN: 6/1/2023 | (2) 6' X 55' RAMPS W/ EQUALIZER SIDE VIEW |
| | CHECKED: | |
| | MANAG.APPR: | |
| | ISSUED TO: MANUFACTURE | |
| | DESIGN DRAFTER: R.BAKER | SIZE B · SCALE 1:100 · DWG TYPE/NO. · REV 0 |
| | FABRICATOR: | SHEET 32 OF 42 |

AUTOCAD .DWG

# DECKING

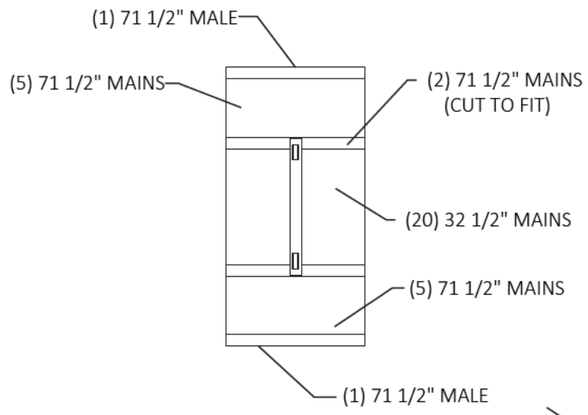


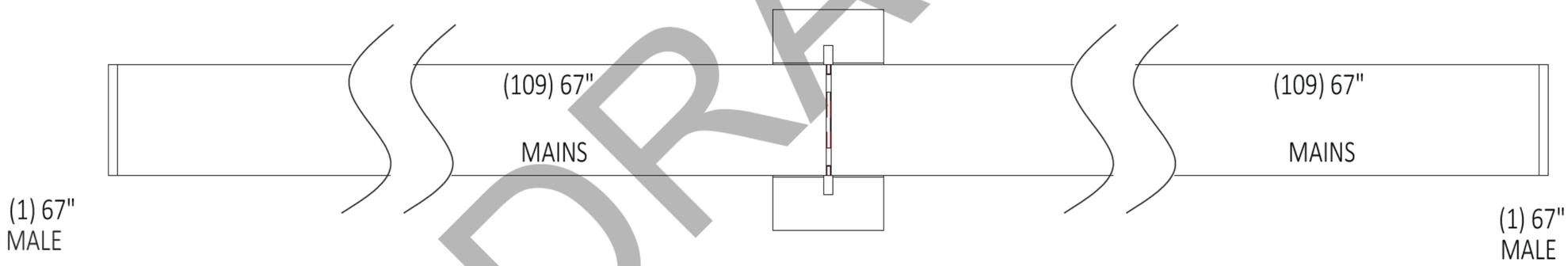


DRAFT

DECKING COLOR:

D:\Pictures\LOGO\FLOTATION LOGO\FSI LOGO BW.JPG

—SHEET DETAIL—

| | |
|---|---|
| FILE NAME/CUSTOMER → | SHORES AT THE PENINSULA.dwg |
| DRAWN: 6/1/2023 | (2) 6' X 55' RAMPS W/ EQUALIZER DECKING DIAGRAM |
| CHECKED: | |
| MANAG.APPR: | |
| ISSUED TO: MANUFACTURE | |
| DESIGN DRAFTER: R.BAKER | |
| FABRICATOR: | |

| SIZE | SCALE | DWG TYPE/NO. | REV |
|---|---|---|---|
| B | 1:80 | | 0 |

SHEET 33 OF 42

AUTOCAD .DWG

| DECKING CUT LIST | | |
|---|---|---|
| QTY. | DESCRIPTION | COLOR |
| 218 | 67" MARINE MAINS | |
| 2 | 67" MARINE MALES | |
| | | |
| 12 | 71-1/2" MARINE MAINS | |
| 20 | 32 1/2" MARINE MAINS | |
| 2 | 71 $\frac{1}{2}$" MARINE MALES | |
| | | |
| | | |
| | | |
| | | |
| | | |

DRAFT

D:\Pictures\LOGO\FULSTATION LOGO\FSI LOGO BW.JPG

—SHEET DETAIL—

FILE NAME/CUSTOMER → SHORES AT THE PENINSULA.dwg

DRAWN: 6/1/2023

CHECKED:

MANAG.APPR:

ISSUED TO: MANUFACTURE

DESIGN DRAFTER: R.BAKER

FABRICATOR:

(2) 6' X 55' RAMPS W/ EQUALIZER
DECKING CUT SHEET

| SIZE | SCALE | DWG TYPE/NO. | REV |
|---|---|---|---|
| B | 1:80 | | 0 |

AUTOCAD .DWG

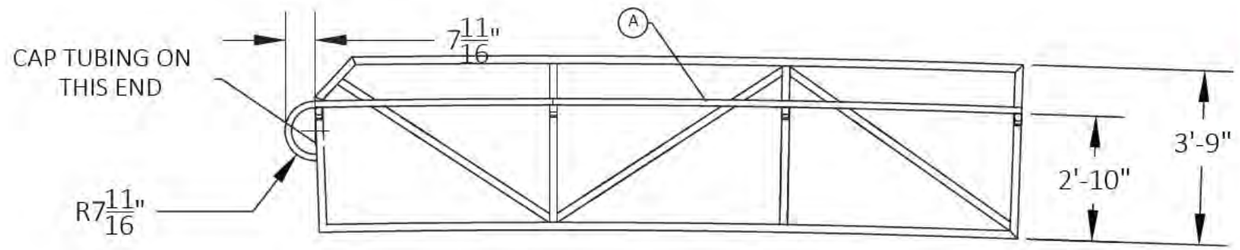


| STOCK LIST | | |
|---|---|---|
| DET. NO. | QTY. | DESCRIPTION |
| A | 2 | 1 1/4" SCH. 40 ALUM. PIPE 18' LG. **ROLLED ON ONE END** CUT TO FIT** |
| B | 8 | GRAB BAR BRACKETS 1 3/4" LG. |
| C | 2 | 1" X 2" TUBING 15'-2" LG. |

END RAMP SECTION

SEE ATTACHMENT
SHEET FOR THIS
END OF
THE RAMP

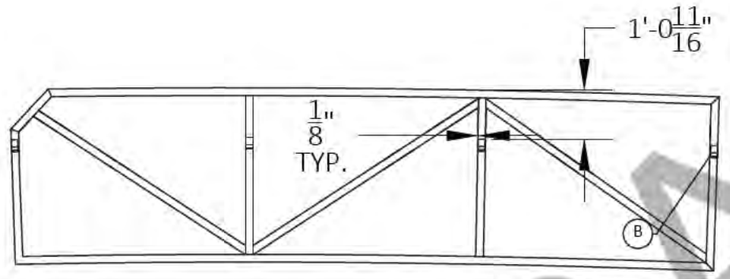


1'-0 11/16"
FROM THE TOP OF
THE RAMP TO THE
TOP OF THE GRAB RAIL
BRACKET

BOLT-UPS
ON THE THIS
END OF THE RAMP

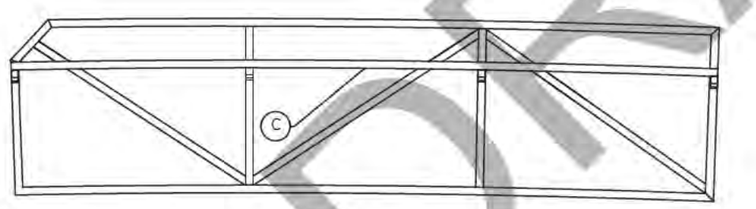


END RAMP SECTION

HANDRAILS ROLL INTO
END OF RAMP HANDLE

67" DECKING USED

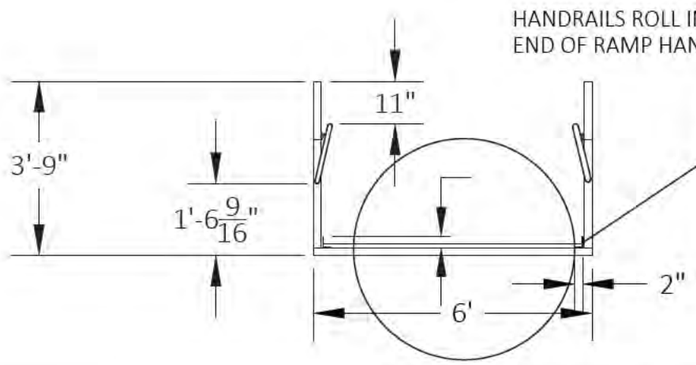


1/8"X2"X3"
ANGLE USED AS
TOE RAIL!
USE (1) 1/8"X 2"
FLATPLATE DOWN THE
CENTER OF THE RAMP

12 11/16"
FROM THE TOP OF
THE RAMP TO THE
TOP OF THE GRAB RAIL
BRACKET

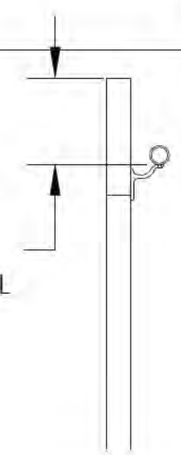

6 X 15' END
RAMP SECTION

DRAFT

| —SHEET DETAIL— | | | | |
|---|---|---|---|---|
| FILE NAME/CUSTOMER → | SHORES AT THE PENINSULA.dwg | | | |
| DRAWN: 6/1/2023 | (2) 6' X 55' RAMPS W/ EQUALIZER ERD | | | |
| CHECKED: | | | | |
| MANAG.APPR: | | | | |
| ISSUED TO: MANUFACTURE | | | | |
| DESIGN DRAFTER: R.BAKER | SIZE B | SCALE 1:40 | DWG TYPE/NO. | REV 0 |
| FABRICATOR: | | | SHEET 35 OF 42 | |

D:\Pictures\LOGO\FLOATION LOGO\FPS LOGO BW.JPG

AUTOCAD .DWG

INSIDE VIEW

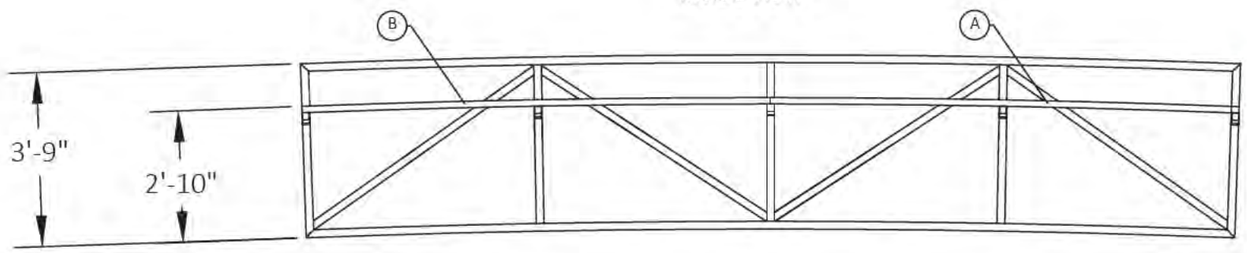


| STOCK LIST | | |
|---|---|---|
| DET. NO. | QTY. | DESCRIPTION |
| A | 2 | 1 1/4" SCH. 40 ALUM. PIPE 20' LG. CUT TO FIT** |
| B | 2 | 1 1/4" SCH. 40 ALUM PIPE 10'-1 5/16" LG. |
| C | 10 | GRAB BAR BRACKETS 1 3/4" LG. |

MIDDLE RAMP SECTION

BOLT-UPS
ON THE THIS
END OF THE RAMP

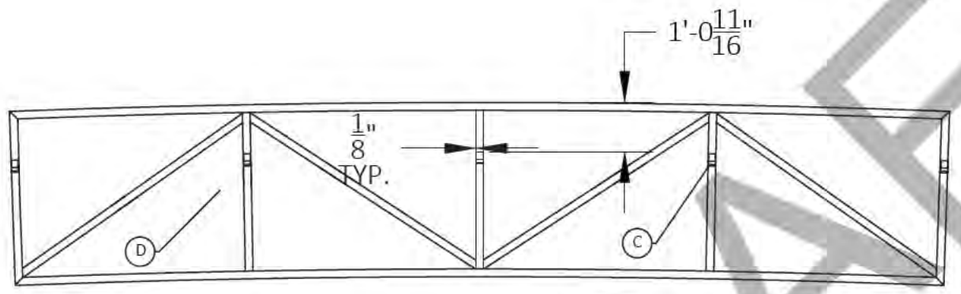


1'-0 11/16"
FROM THE TOP OF
THE RAMP TO THE
TOP OF THE GRAB RAIL
BRACKET

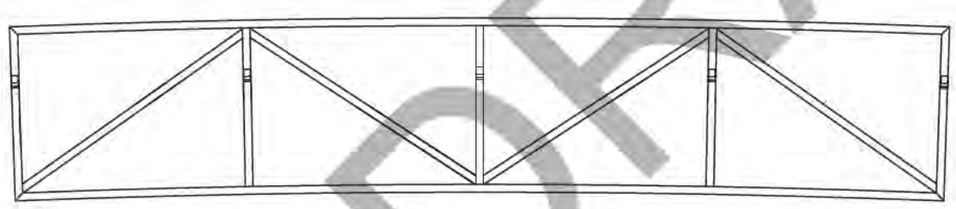

MIDDLE RAMP SECTION

HANDRAILS ROLL INTO
END OF RAMP HANDLE

DECKING USED

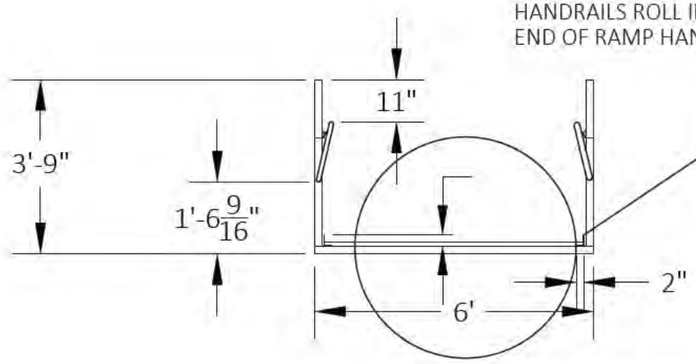


1/8"X2"X3"
ANGLE USED AS
TOE RAIL!
USE (1) 1/8"X 2"
FLATPLATE DOWN THE
CENTER OF THE RAMP

12 11/16"
FROM THE TOP OF
THE RAMP TO THE
TOP OF THE GRAB RAIL
BRACKET

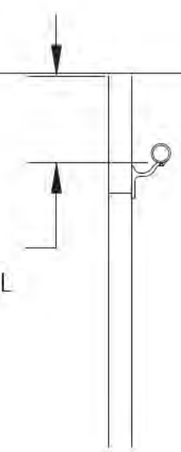

6' X 20' MIDDLE
RAMP SECTION

DRAFT

| -SHEET DETAIL- | |
|---|---|
| FILE NAME/CUSTOMER → | SHORES AT THE PENINSULA.dwg |
| DRAWN: 6/1/2023 | (2) 6' X 55' RAMPS W/ EQUALIZER MRD |
| CHECKED: | |
| MANAG.APPR: | |
| ISSUED TO: MANUFACTURE | |
| DESIGN DRAFTER: R.BAKER | |
| FABRICATOR: | |

| SIZE | SCALE | DWG TYPE/NO. | REV |
|---|---|---|---|
| B | 1:24 | | 0 |

SHEET 36 OF 42

AUTOCAD .DWG

| | | |
|---|---|---|
| A | 2 | 1 1/4" SCH. 40 ALUM. PIPE 13' LG. **ROLLED ON ONE END** CUT TO FIT** |
| B | 2 | 1 1/4" SCH. 40 ALUM PIPE 10'-1 5/16" LG. |
| C | 10 | GRAB BAR BRACKETS 1 3/4" LG. |

INSIDE VIEW

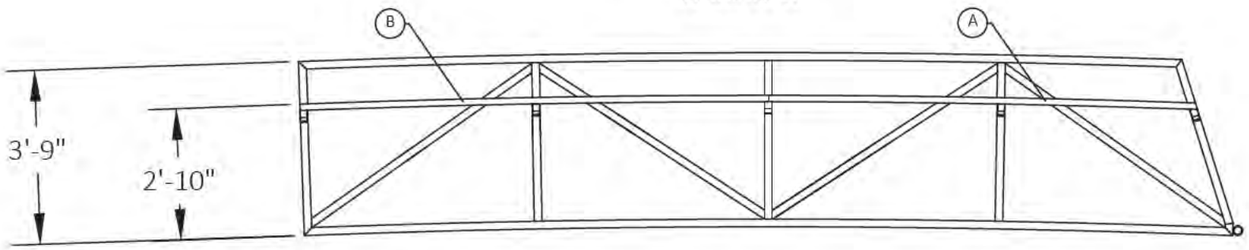


EQUALIZER END RAMP SECTION

BOLT-UPS
ON THE THIS
END OF THE RAMP

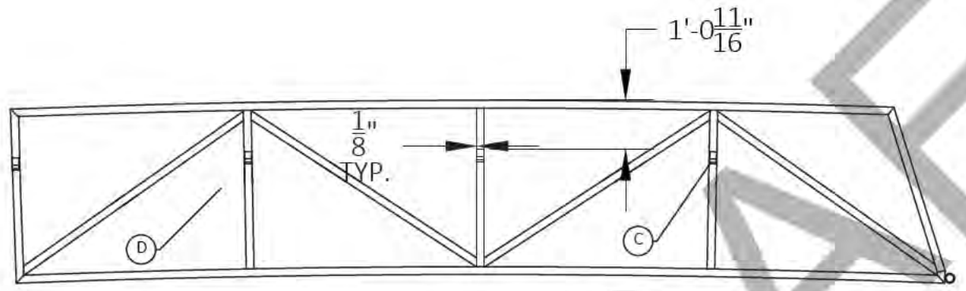


1'-0 11/16"
FROM THE TOP OF
THE RAMP TO THE
TOP OF THE GRAB RAIL
BRACKET

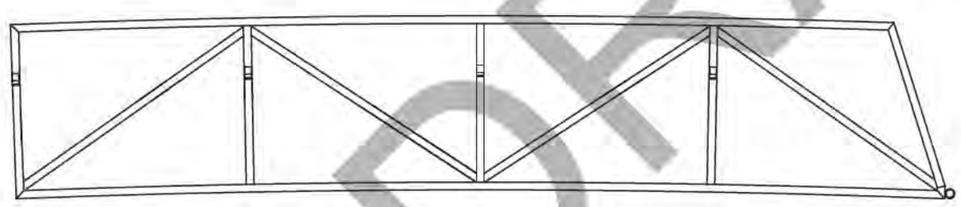

72" TRACK AND PIPE
ON THE THIS
END OF THE RAMP

EQUALIZER END RAMP SECTION

HANDRAILS ROLL INTO
END OF RAMP HANDLE

DECKING USED

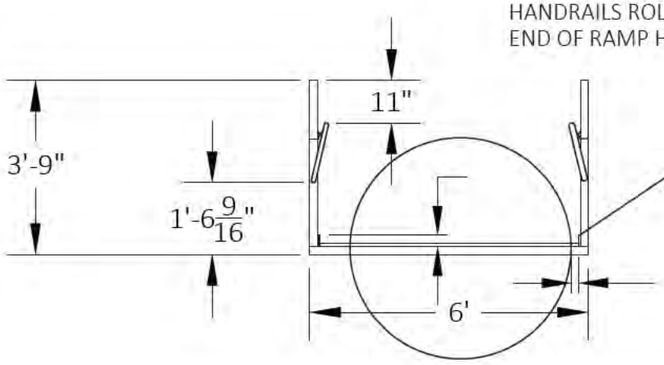


1/8"X2"X3"
ANGLE USED AS
TOE RAIL!
USE (1) 1/8"X 2"
FLATPLATE DOWN THE
CENTER OF THE RAMP

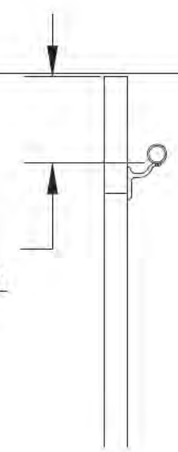

12 11/16"
FROM THE TOP OF
THE RAMP TO THE
TOP OF THE GRAB RAIL
BRACKET

6' X 20' EQUALIZER END
RAMP SECTION

DRAFT

| | | | | |
|---|---|---|---|---|
| —SHEET DETAIL— | | | | |
| FILE NAME/CUSTOMER → | SHORES AT THE PENINSULA.dwg | | | |
| DRAWN: 6/1/2023 | (2) 6' X 55' RAMPS W/ EQUALIZER EERD | | | |
| CHECKED: | | | | |
| MANAG.APPR: | | | | |
| ISSUED TO: MANUFACTURE | | | | |
| DESIGN DRAFTER: R.BAKER | SIZE B | SCALE 1:40 | DWG TYPE/NO. | REV 0 |
| FABRICATOR: | | | SHEET 37 OF 42 | |

D:\Pictures\LOGO\FLOTATION LOGO\PS LOGO BW.JPG

AUTOCAD .DWG

| CUT LIST | | | | | | | |
|---|---|---|---|---|---|---|---|
| DIE NUMBER | ITEM | QTY. | DESCRIPTION | DEGREE | FT | IN | TOTAL FT |
| FH-07812 | A | 1 | RAMP PIPE | 0°-0° | 2 | 9 7/16" | #### |
| FS-07813 | B | 2 | RAMP TRACK | 0°-0° | 6 | 0" | 12.00 |
| FH-07812 | C | 2 | RAMP PIPE | 0°-0° | | 9 7/16" | #### |
| FH-07812 | D | 2 | RAMP PIPE | 0°-0° | | 9 11/16" | #### |

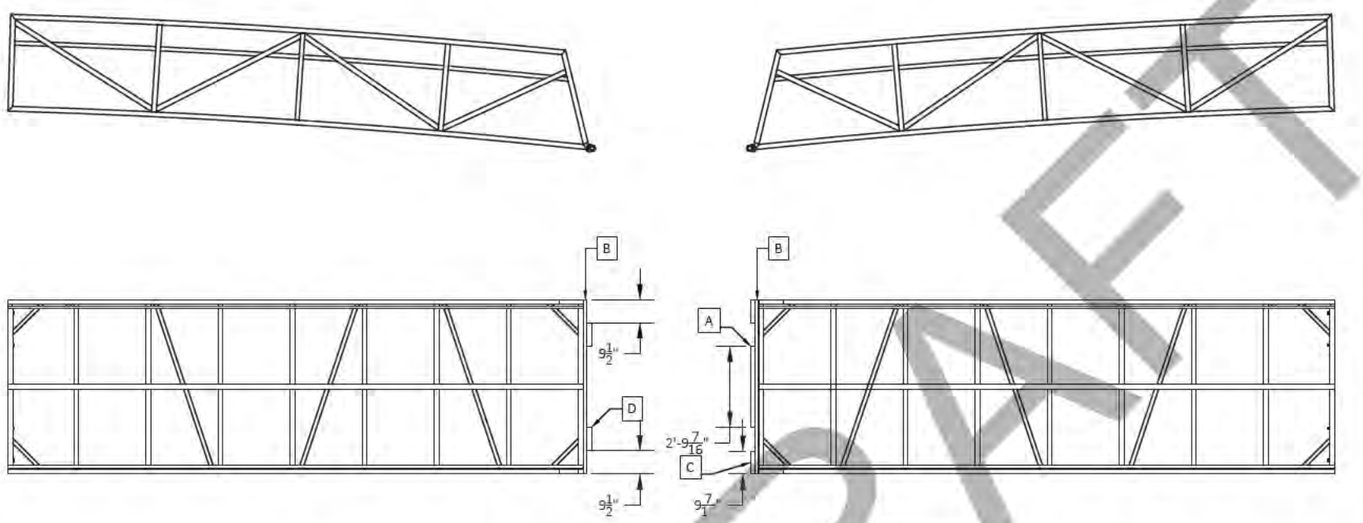


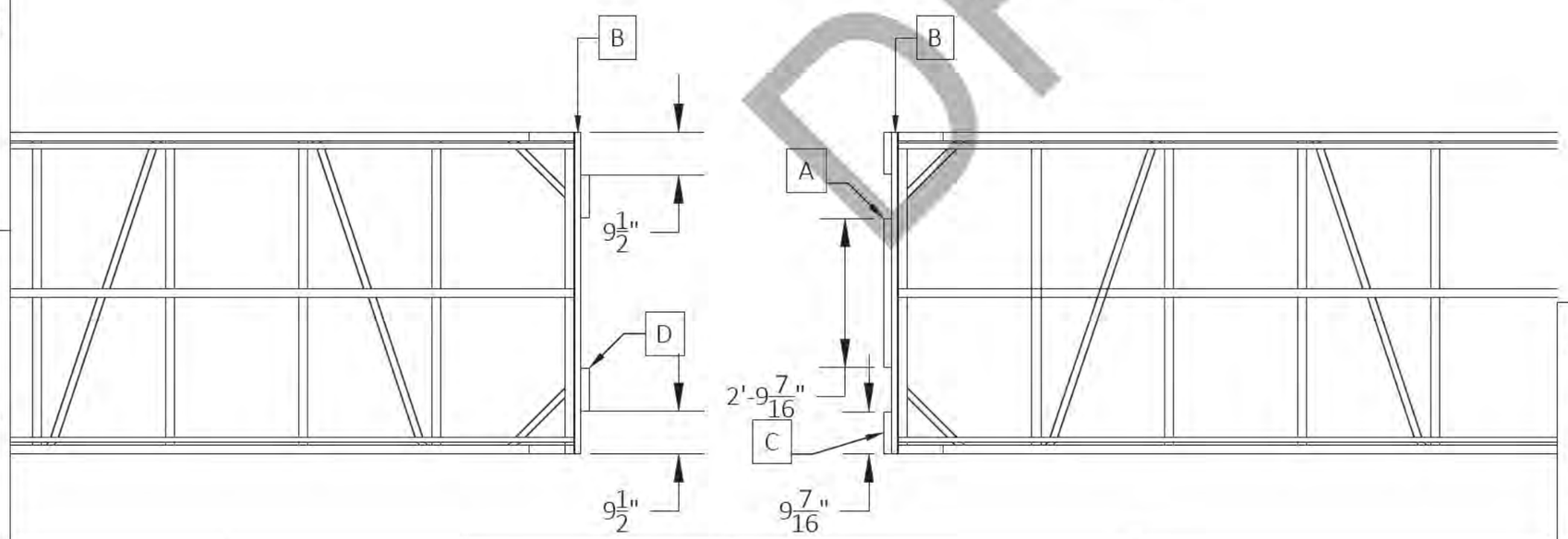


DRAFT

| | | |
|---|---|---|
| —SHEET DETAIL— | | |
| FILE NAME/CUSTOMER → | SHORES AT THE PENINSULA.dwg | |
| DRAWN: 6/1/2023 | (2) 6' X 55' RAMPS W/ EQUALIZER<br>EQ END RAMP DETAIL | |
| CHECKED: | | |
| MANAG.APPR: | | |
| ISSUED TO: MANUFACTURE | | |
| DESIGN DRAFTER: R.BAKER | SIZE B / SCALE 1:32 | DWG TYPE/NO. / REV 0 |
| FABRICATOR: | | SHEET 38 OF 42 |

D:\Pictures\LOGO\FLOTATION LOGO\FP LOGO BW.JPG

AUTOCAD .DWG

| CUT LIST | | | | | | | |
|---|---|---|---|---|---|---|---|
| DIE NUMBER | ITEM | QTY. | DESCRIPTION | DEGREE | FT | IN | TOTAL FT |
| FS-00431 | A | 2 | 8" H.W. | 45°-45° | 12 | 0" | 24.00 |
| FS-00431 | B | 2 | 8" H.W. | 45°-45° | 6 | 0" | 12.00 |
| FS-00431 | C | 5 | 8" H.W. | 45°-45° | 5 | 7 1/2" | ##### |
| | D | 1 | 6" H.W. | 0°-0° | 8 | 5/8" | 8.05 |
| FS-00431 | E | 8 | 8" H.W. | 45°-45° | 1 | 2" | 9.33 |
| FH-07812 | F | 2 | RAMP PIPE | 0°-0° | | 8" | 1.33 |
| FS-00678 | G | 2 | $\frac{1}{4}$" X 6" FLATPLATE | 0°-0° | | 2 1/4" | #### |
| FS-00431 | H | 2 | 8" H.W. | 0°-0° | 2 | 9 3/16" | #### |
| FS-07813 | I | 1 | RAMP TRACK | 0°-0° | 8 | 0 | 8.00 |

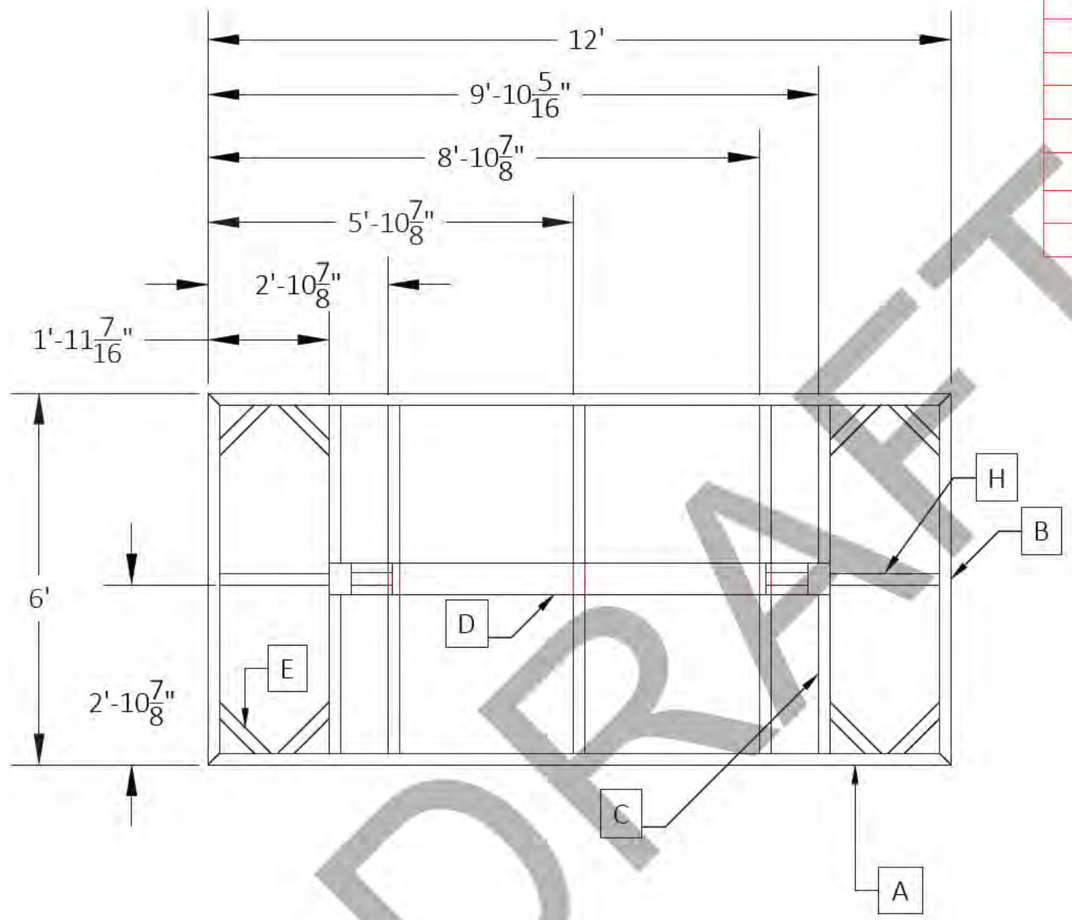


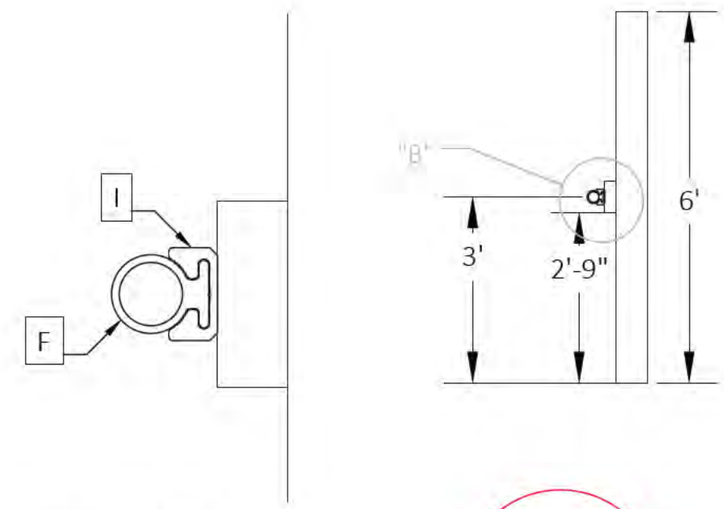


VIEW IN CIRCLE "B"

1074

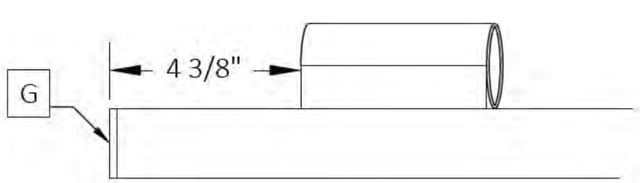


VIEW IN CIRCLE "A"

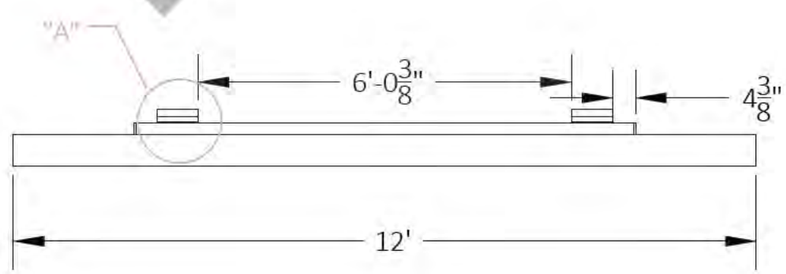


DRAFT

| | | |
|---|---|---|
| —SHEET DETAIL— | | |
| FILE NAME/CUSTOMER → | SHORES AT THE PENINSULA.dwg | |
| DRAWN: 6/1/2023 | (2) 6' X 55' RAMPS W/ EQUALIZER 1074 | |
| CHECKED: | | |
| MANAG.APPR: | | |
| ISSUED TO: MANUFACTURE | | |
| DESIGN DRAFTER: R.BAKER | SIZE B / SCALE 1:30 | DWG TYPE/NO. / REV 0 |
| FABRICATOR: | | SHEET 39 OF 42 |

AUTOCAD .DWG

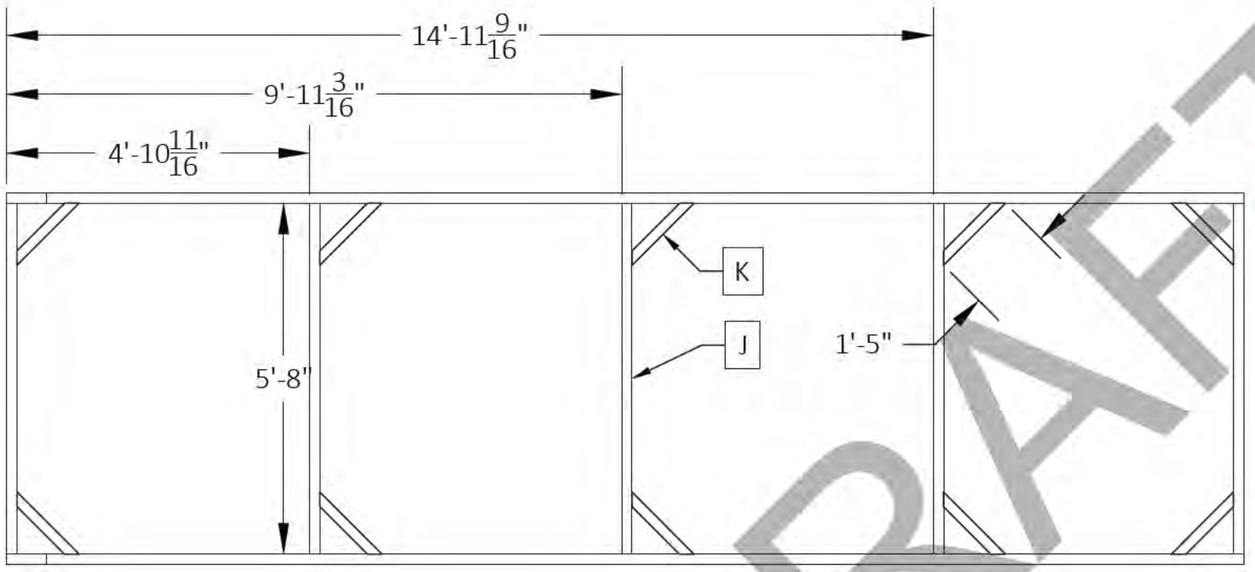


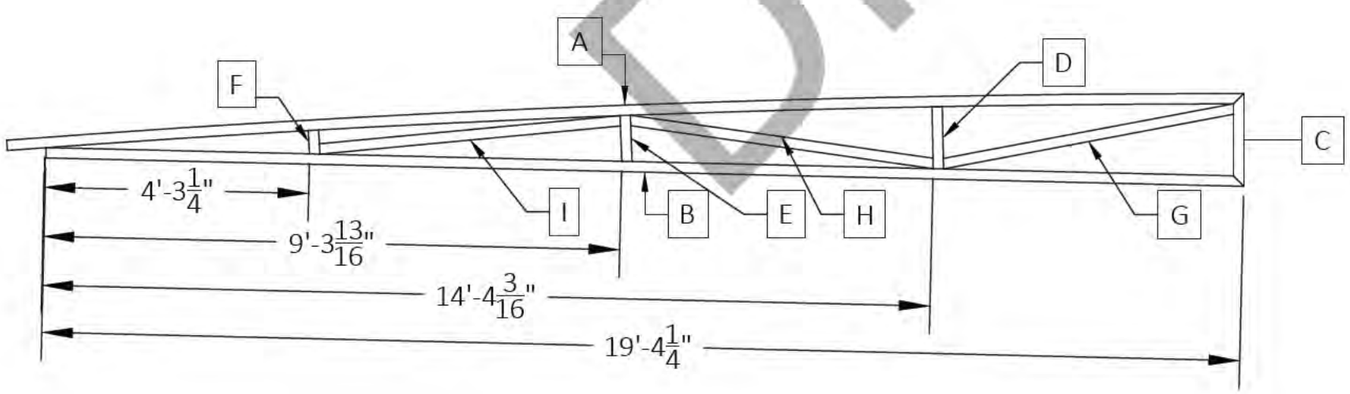


## CUT/STOCK LIST

| DIE NUMBER | ITEM | QTY. | DESCRIPTION | DEGREE | FT. | IN. | TOTAL FT. |
|---|---|---|---|---|---|---|---|
| FH-01356 | A | 2 | 1/8" X 2" X 2" TUBE | 45°-0° | 20 | 0" | 40.00 |
| FH-01356 | B | 2 | 1/8" X 2" X 2" TUBE | 45°-45° | 19 | 4 1/4" | ##### |
| FH-01356 | C | 2 | 1/8" X 2" X 2" TUBE | 45°-45° | 1 | 6" | 3.00 |
| FH-01356 | D | 2 | 1/8" X 2" X 2" TUBE | 0°-2° | 1 | 1/16" | 2.01 |
| FH-01356 | E | 2 | 1/8" X 2" X 2" TUBE | 0°-2° | | 8 15/16" | #### |
| F 01356 | F | 2 | 1/8" X 2" X 2" TUBE | 0°-2° | | 4 11/16 | 0.78 |
| FH-01356 | G | 2 | 1/8" X 2" X 2" TUBE | 10°-11° | 4 | 8 7/8 | 9.48 |
| FH-01356 | H | 2 | 1/8" X 2" X 2" TUBE | 9°-10° | 4 | 11 1/4 | 9.88 |
| F 01356 | I | 2 | 1/8" X 2" X 2" TUBE | 2°-3° | 4 | 10 1/2 | 9.75 |
| FH-01 56 | J | 5 | 1/8" X 2" X 2" TUBE | 0°-0° | 5 | 8 | 28.33 |
| FH-01356 | K | 10 | 1/8" X 2" X 2" TUBE | 0°-2° | 1 | 5 | 14.17 |

(4)REQUIRED

DRAFT

D:\Pictures\LOGO\FLOTATION LOGO\FSI LOGO BW.JPG

| | |
|---|---|
| —SHEET DETAIL— | |
| FILE NAME/CUSTOMER → | SHORES AT THE PENINSULA.dwg |
| DRAWN: 6/1/2023 | (2) 6' X 55' RAMPS W/ EQUALIZER UC |
| CHECKED: | |
| MANAG.APPR: | |
| ISSUED TO: MANUFACTURE | |
| DESIGN DRAFTER: R.BAKER | SIZE B · SCALE 1:30 · DWG TYPE/NO. · REV 0 |
| FABRICATOR: | SHEET 40 OF 42 |

AUTOCAD .DWG

| ➔ ACCESSORIES ← | | | |
|---|---|---|---|
| QTY. | DESCRIPTION | PC | COLOR |
| 54 | HORIZONTAL BUMPER | | |
| 24 | CORNER BUMPER | | |
| 105 | SUPER CUSHION | | |
| 2 | DIAGONAL CABLES (RAMP) | | |
| 132 | POST TRIM (2pc. - # of post) | | |
| 1 | ROLLER GUIDE ASSEMBLY | | |
| 55 | FLOAT PLUGS | | |
| 42 | CLEATS | | |
| 51 | 20' STAIR NOSING (sti k) | | |
| 2 | RAMP WEIGHT LIMIT TAG | | |
| 24 | 4" PVC CAPS | | |
| 24 | SPUD POLE **SI ENCERS * | | |
| 24 | 4" GALVANIZED SPUD POLES | | |
| 2 | DECKING TOUCH-UP | | |

DRAFT

D:\Pictures\LOGO\FLOTATION LOGO\FPS LOGO BW.JPG

—SHEET DETAIL—

FILE NAME/CUSTOMER ➔ SHORES AT THE PENINSULA.dwg

DRAWN: 6/1/2023

CHECKED:

MANAG.APPR:

ISSUED TO: MANUFACTURE

DESIGN DRAFTER: R.BAKER

FABRICATOR:

ACCESSORY SHEET

| SIZE | SCALE | DWG TYPE/NO. | REV |
|---|---|---|---|
| B | 1:30 | | 0 |

SHEET 41 OF 42

AUTOCAD .DWG

## LOAD LIST

| ITEM # | QTY | DESCRIPTION | COLOR |
|---|---|---|---|
| | | **FLOATS** | |
| | 20 | 3X6X16 | |
| | 11 | 4X6X16 | |
| | 24 | 4X6X20 | |
| | | | |
| | | **FRAMES** | |
| BW627L | 2 | 6 X 27 BACKWALK | |
| BW625 | 8 | 6 X 25 BACKWALK | |
| F424 | 11 | FINGER | |
| | | | |
| | | **DECKING (LOCKDRY AND MARINE)** | |
| | 530 | 47-1/2" LOCKDRY MAINS | |
| | 490 | 5' 11-1/2" LOCKDRY MAINS | |
| | | | |
| | 11 | 47-1/2" LOCKDRY STARTER | |
| | 1 | 5' 11-1/2" LOCKDRY STARTER | |
| | | | |
| | 11 | 47-1/2" LOCKDRY FINISHER | |
| | 1 | 5' 11-1/2" LOCKDRY FINISHER | |

## LOAD LIST

| ITEM # | QTY. | DESRIPTION | FT. | IN. | COLOR |
|---|---|---|---|---|---|
| | | **POST AND BRACES** | | | |
| A | 44 | 4" POST | 10 | 2 | |
| B | 22 | 4" POST | 10 | 8-1/16 | |
| C | 22 | 4" POST | 11 | 2-3/16 | |
| D | 22 | 4" POST | 11 | 2 3/8 | |
| E | 22 | 4" POST | 10 | 8 1/4 | |
| | 42 | 4" STUB UP | 7 | 4 | |
| | | | | | |
| SP1 | 8 | SPLIT HAND RAIL | 20 | $8\frac{7}{8}$ | |
| SP2 | 2 | SPLIT HAND RAIL | 18 | 9-15/1 | |
| | | | | | |
| | | ANCHORING | | | |
| K-SP1 | 21 | 8' SPUD POLE COLLARS | | | |
| SP9-8 | 2 | 3' SPUD POLE COLLARS | | | |
| | 23 | 21' SPUD POLES | | | |
| | | | | | |
| | | **ROOF COMP NEN** | | | |
| F | 10 | 2" X 2 ANGLE | 6 | $\frac{1}{2}$ | |
| G | 10 | 2 2" ANGLE | 6 | $5\frac{1}{8}$ | |
| H | 10 | 2" X 2 N LE | 6 | $5\frac{1}{16}$ | |
| I | 10 | " X 2" AN E | 6 | $3\frac{5}{16}$ | |
| J | | 2" X ANGLE | 4 | $5\frac{1}{4}$ | |
| K | 0 | 2" X 2 NGLE | 5 | $2\frac{7}{16}$ | |
| L | 10 | 2" X 2" NGLE | 29 | $7\frac{1}{8}$ | |
| N | 16 | Z EAM | 30 | | |
| O | 64 | Z BEAM | 29 | | |

## RAMP LOAD LIST

| QTY. | DESCRIPTION | BANK ATTACHMENT | WATER ATTACHMENT | COLOR |
|---|---|---|---|---|
| | **RAMP** | | | |
| 2 | 6' X 55' | ROLLERS | DOCK | |
| 1 | 6' X 12" EQUALIZER | | | |
| | | | | |
| 218 | 67" MARINE MAINS | | | |
| 2 | 67" MARINE MALES | | | |
| | | | | |
| 2 | 71-1/2" MARINE MAINS | | | |
| 20 | 32 1/2" MARINE MAINS | | | |
| 2 | $71\frac{1}{2}$" MARINE MALES | | | |
| | | | | |

DRAFT

D:\Pictures\LOGO\FLOTATION LOGO\FSI LOGO BW.JPG

—SHEET DETAIL—

FILE NAME/CUSTOMER → SHORES AT THE PENINSULA.dwg

DRAWN: 6/1/2023

CHECKED:

MANAG.APPR:

ISSUED TO: MANUFACTURE

DESIGN DRAFTER: R.BAKER

FABRICATOR:

LOAD LIST

| SIZE | SCALE | DWG TYPE/NO. | REV |
|---|---|---|---|
| B | 1:30 | | 0 |

SHEET 42 OF 42

AUTOCAD .DWG

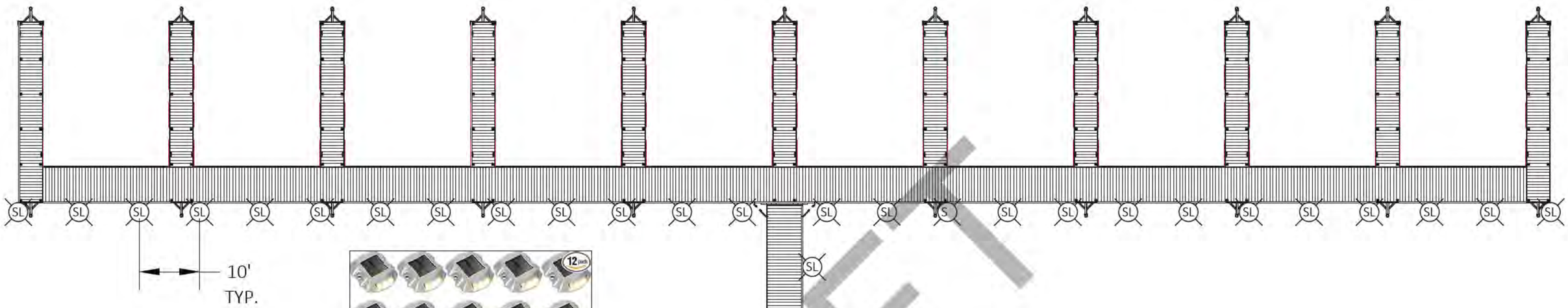

| TECHNICAL DETAILS | |
|---|---|
| BRAND | JACKYLED |
| COLOR | WA |
| MATERIAL | AL |
| STYLE | ODERN |
| LIGHT FIXTURE FORM | PATH |
| PRODUCT DIMENSIONS | 9.37"W X 0.94"H |
| INDOOR/OUTDOOR USAGE | TDOOR |
| POWER SOURCE | SOLA WERED |
| SPECIAL FEATURE | IP68 WA ROOF |
| CONTROL METHOD | REMO |
| LIGHT SOURCE TYPE | LED |
| SHADE MATERIAL | ALUMINUM ALLO |
| NUMBER OF LIGHT SOURCES | 6 |
| VOLTAGE | 2 VOLTS |
| LIGHT COLOR | WARM LIGHT |
| SHAPE | SQUARE |
| WARRANTY TYPE | 1-YEAR WARRANTY |
| LIGHTING METHOD | DOWNLIGHT |
| ITEM WEIGHT | 8.99 POUNDS |
| MOUNTING TYPE | DECK MOUNT |
| SHADE COLOR | WHITE |
| FIXTURE TYPE | NON REMOVABLE |
| MANUFACTURER | JACKYLED |
| COLLECTION | DOCK LIGHTS |
| PLUG FORMAT | A- US STYLE |
| COLOR TEMPERATURE | 3000 KELVIN |

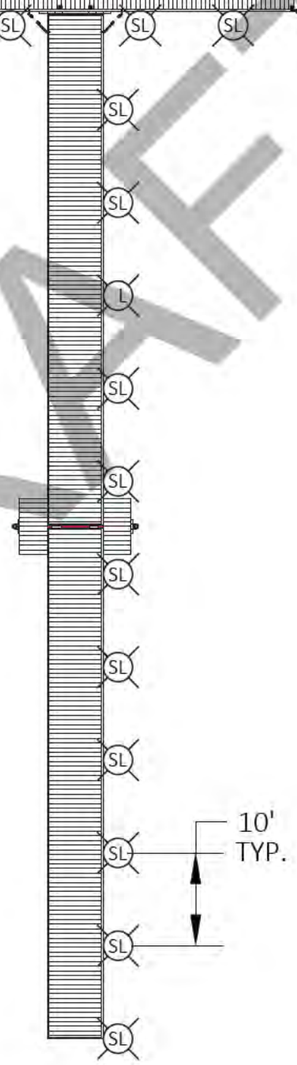


SOLAR LIGHTS- SUPPLIED AND INSTALLED BY: BD ACQUISITIONS, LLC.

DRAFT

| | | | | |
|---|---|---|---|---|
| D:\Pictures\LOGO\FLOTATION LOGO\PS LOGO BW.JPG | —SHEET DETAIL— | | | |
| | FILE NAME/CUSTOMER → | SHORES AT THE PENINSULA.dwg | | |
| | DRAWN: 6/1/2023 | PLAN VIEW<br>LIGHT PLACEMENT | | |
| | CHECKED: | | | |
| | MANAG.APPR: | | | |
| | ISSUED TO: MANUFACTURE | | | |
| | DESIGN DRAFTER: R.BAKER | SIZE B / SCALE 1:50 | DWG TYPE/NO. | REV 0 |
| | FABRICATOR: | | SHEET 9 OF 42 | |

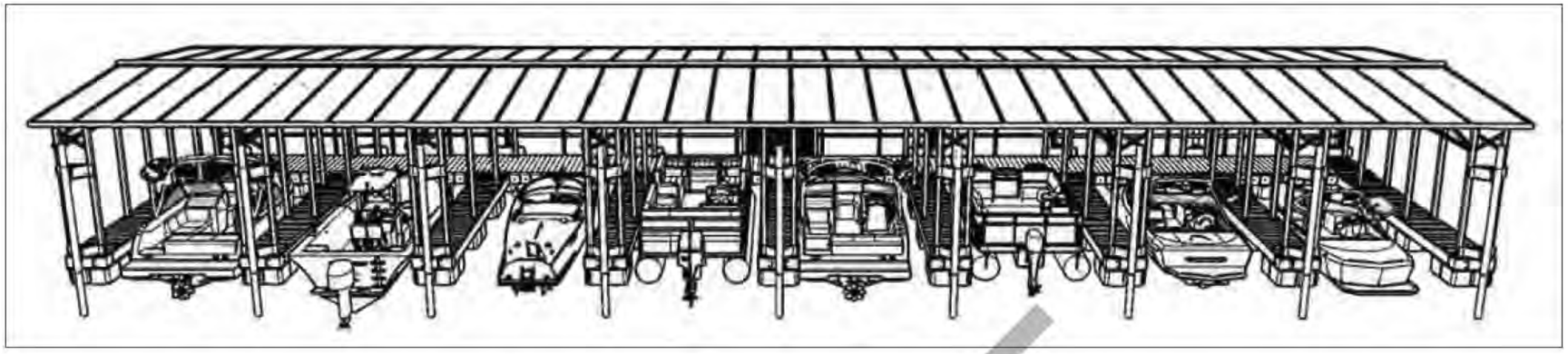

# 8 SLIP FOR THE PENINSULA
# LOTS 16-23

DRAFT

| D WING LIST | | | |
|---|---|---|---|
| SHEET NUMBER | DESCRIPTION | SHEE MBER | DESCRIPTION |
| 1 | BANK VIEW | 22 | 4IN STUB UP |
| 2 | L T V W | 23 | 3' COLLAR VIEWS |
| 3 | NGLE CUT ST | 24 | 3' COLLAR |
| 4 | WATER V W | 25 | 21' POLE |
| 5 | PLAN IEW | 26 | SR1 |
| 6 | FLO DIAGRAM | 27 | SR2 |
| 7 | ROOF A SEMBLY | 28 | RAMP SIDE VIEW |
| | AME DIA RAM | 29 | RAMP SIDE DIAGRAM |
| 9 | DE ING DIAGRAM | 30 | RAMP DECKING DIAGRAM |
| 10 | P ST DIAGRAM | 31 | RAMP DECKING CUTLIST |
| 11 | BW627.5L | 32 | END RAMP DETAIL |
| 12 | BW626-L | 33 | MIDDLE RAMP DETAIL |
| 13 | ATTACHMENT SHEET | 34 | EQ END RAMP DETAIL |
| 14 | BW626-R | 35 | EQ END RAMP ATTACHMENT |
| 15 | ATTACHMENT SHEET | 36 | EQUALIZER |
| 16 | BW627.5R | 37 | UNDERCARRIAGE |
| 17 | F324 | 38 | 1068 |
| 18 | 8' COLLAR SIDE | 39 | 1005 |
| 19 | 8' COLLAR FRONT | 40 | 1033 |
| 20 | 8' COLLAR TOP | 41 | ACCESSORIES |
| 21 | 8' COLLAR | 42 | LOAD SHEET |

FLOTATION SYSTEMS, INC.™
ALUMINUM BOAT DOCKS

AUTOCAD .DWG

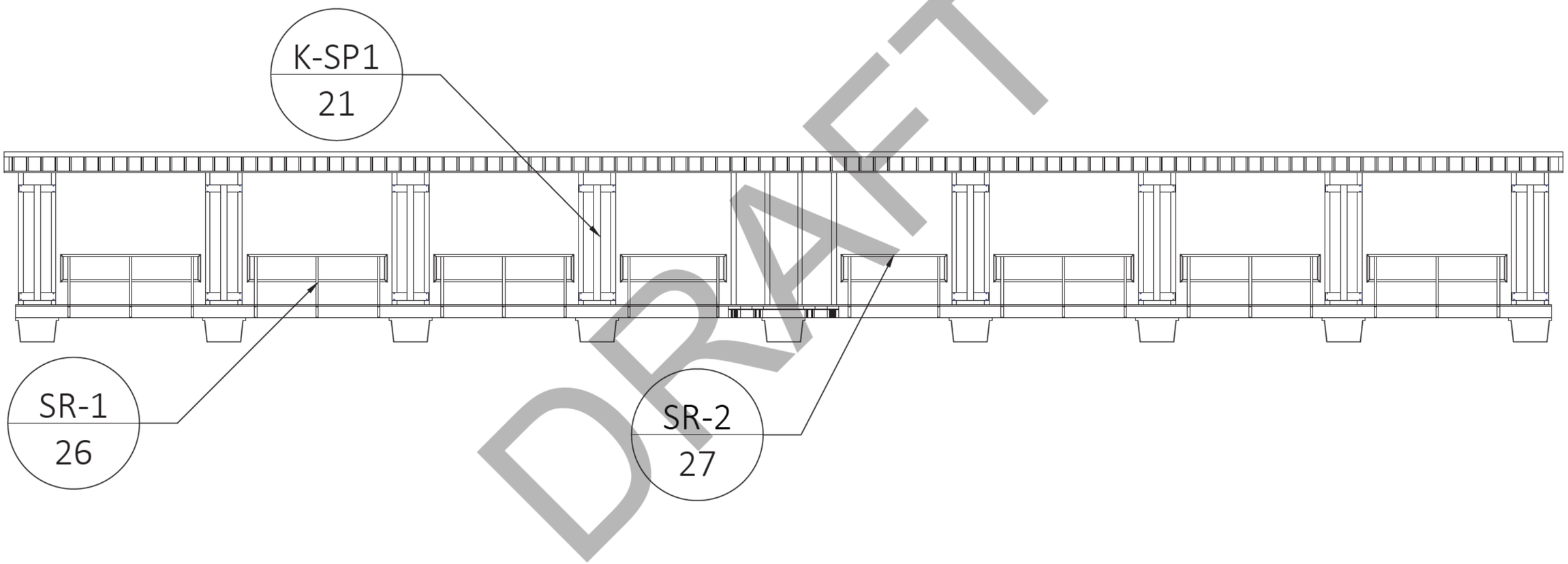


DRAFT

| -SHEET DETAIL- | | | | |
|---|---|---|---|---|
| FILE NAME/CUSTOMER → | 8 SLIP THE PENINSULA LOTS16-23.dwg | | | |
| DRAWN: 9/19/2023 | BANK VIEW | | | |
| CHECKED: | | | | |
| MANAG.APPR: | | | | |
| ISSUED TO: MANUFACTURE | | | | |
| DESIGN DRAFTER: R.BAKER | SIZE B | SCALE 1:88 | DWG TYPE/NO. | REV 0 |
| FABRICATOR: | | | SHEET 1 OF 42 | |

AUTOCAD .DWG

NOTE:
SEE POST DIAGRAM SH-15 FOR EXACT LOCATIONS
WHERE LATERAL BRACING IS REQUIRED. (G, H, I, J)

(2) 3/8"X5 1/2" H.B.
(4) 3/8"X7/8" WASHERS
(2) 3/8" NYLOCK NUTS
PER POST

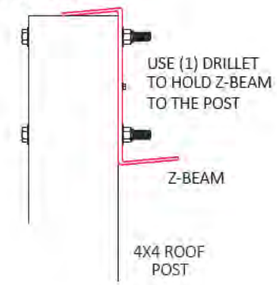


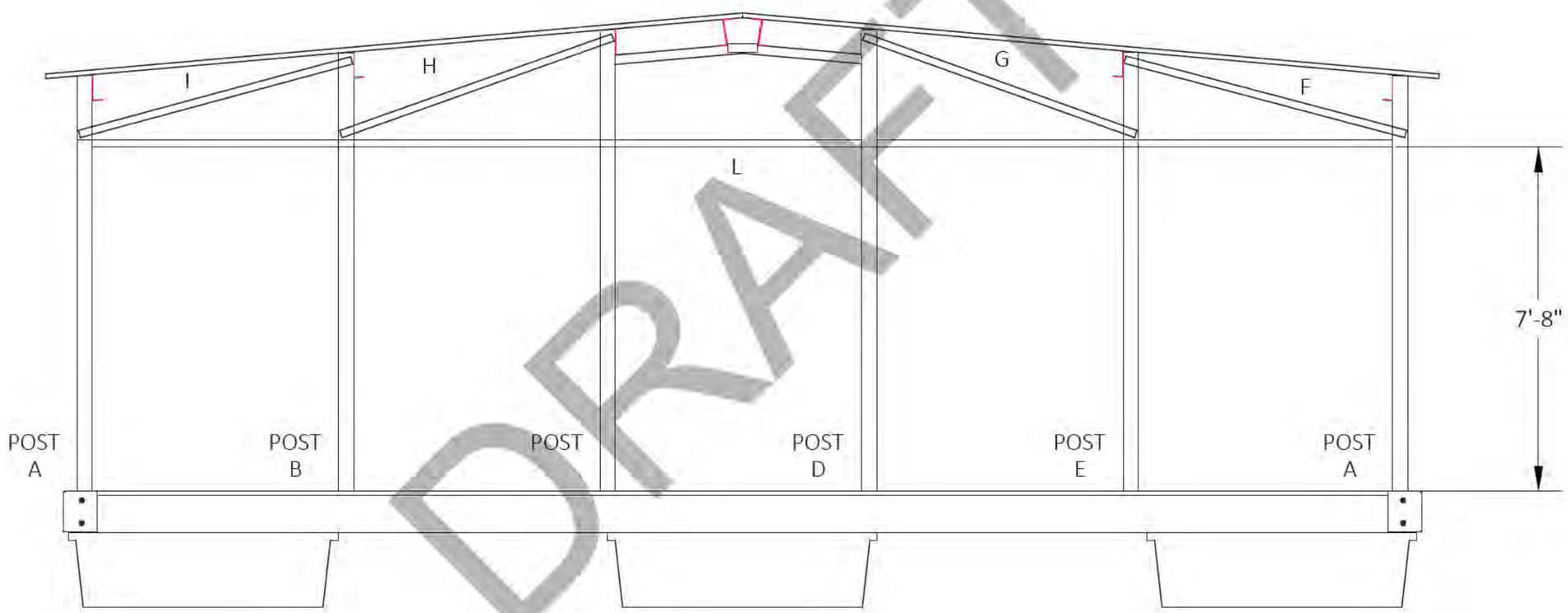


DRAFT

| -SHEET DETAIL- | | | | |
|---|---|---|---|---|
| FILE NAME/CUSTOMER → | 8 SLIP THE PENINSULA LOTS16-23.dwg | | | |
| DRAWN: 9/19/2023 | LEFT SIDE VIEW | | | |
| CHECKED: | | | | |
| MANAG.APPR: | | | | |
| ISSUED TO: MANUFACTURE | | | | |
| DESIGN DRAFTER: K.BAKER | SIZE B | SCALE 1:34 | DWG TYPE/NO. | REV 0 |
| FABRICATOR: | | | SHEET 2 OF 42 | |

AUTOCAD .DWG

# ROOF MATERIAL CUT LIST

| | QTY. | 2" X 2" ANGLE BRACING |
|---|---|---|
| F | 9 | 6'-5 1/12" LG. |
| G | 9 | 6'-5 1/8" LG. |
| H | 9 | 6'-5 1/16" LG. |
| I | 9 | 6'-3 5/16" |
| J | 18 | 4'-5 1/4" |
| K | 36 | 5'-2 7/16 |
| L | 9 | 29'-7 1/8 |
| | | |
| | | |
| | QTY. | Z-BEAM |
| N | 16 | 30' |
| O | 16 | 29' |

DRAFT

| -SHEET DETAIL- | | | | |
|---|---|---|---|---|
| FILE NAME/CUSTOMER → | 8 SLIP THE PENINSULA LOTS16-23.dwg | | | |
| DRAWN: 9/19/2023 | LEFT SIDE VIEW | | | |
| CHECKED: | | | | |
| MANAG.APPR: | | | | |
| ISSUED TO: MANUFACTURE | | | | |
| DESIGN DRAFTER: R.BAKER | SIZE B | SCALE 1:32 | DWG TYPE/NO. | REV 0 |
| FABRICATOR: | | | | SHEET 3 OF 42 |

AUTOCAD .DWG

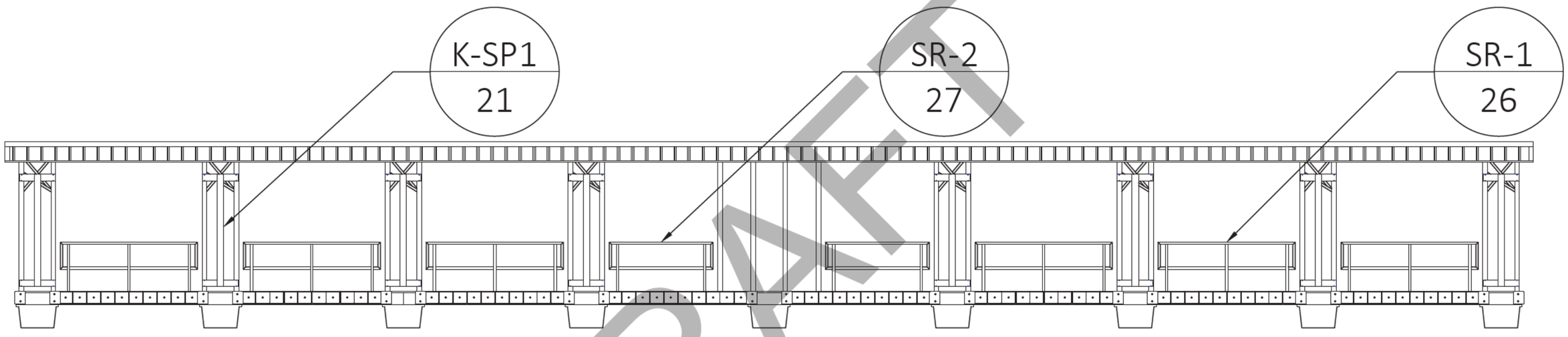


DRAFT

| | |
|---|---|
| -SHEET DETAIL- | |
| FILE NAME/CUSTOMER → | 8 SLIP THE PENINSULA LOTS16-23.dwg |
| DRAWN: 9/19/2023 | LEFT SIDE VIEW |
| CHECKED: | |
| MANAG.APPR: | |
| ISSUED TO: MANUFACTURE | |
| DESIGN DRAFTER: R.BAKER | SIZE B · SCALE 1:88 · DWG TYPE/NO. · REV 0 |
| FABRICATOR: | SHEET 4 OF 42 |

AUTOCAD .DWG

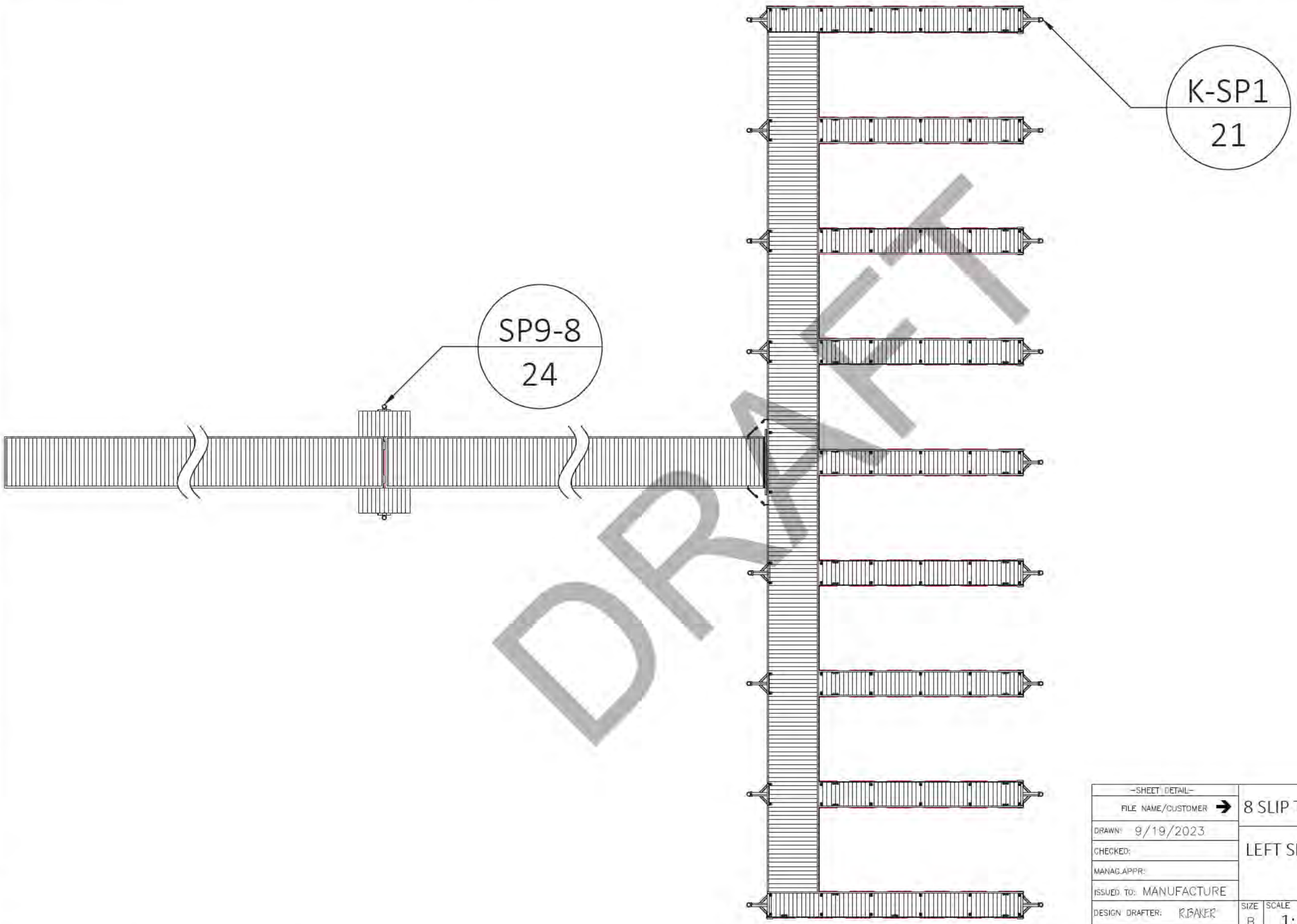


DRAFT

| | |
|---|---|
| -SHEET DETAIL- | |
| FILE NAME/CUSTOMER → | 8 SLIP THE PENINSULA LOTS16-23.dwg |
| DRAWN: 9/19/2023 | LEFT SIDE VIEW |
| CHECKED: | |
| MANAG.APPR: | |
| ISSUED TO: MANUFACTURE | |
| DESIGN DRAFTER: R.BAKER | SIZE B · SCALE 1:140 · DWG TYPE/NO. · REV 0 |
| FABRICATOR: | SHEET 5 OF 42 |

AUTOCAD .DWG

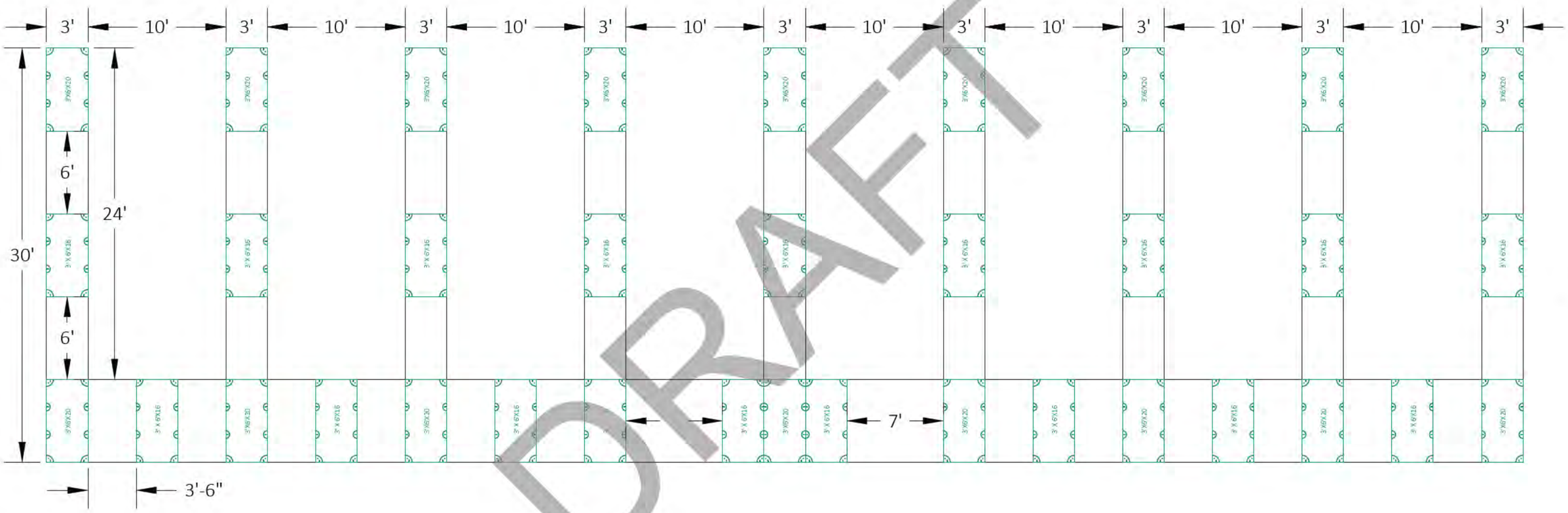


DRAFT

| | |
|---|---|
| -SHEET DETAIL- | |
| FILE NAME/CUSTOMER → | 8 SLIP THE PENINSULA LOTS16-23.dwg |
| DRAWN: 9/19/2023 | FLOAT DIAGRAM |
| CHECKED: | |
| MANAG.APPR: | |
| ISSUED TO: MANUFACTURE | |
| DESIGN DRAFTER: R.BAKER | SIZE B · SCALE 1:88 · DWG TYPE/NO. · REV 0 |
| FABRICATOR: | SHEET 6 OF 42 |

AUTOCAD .DWG

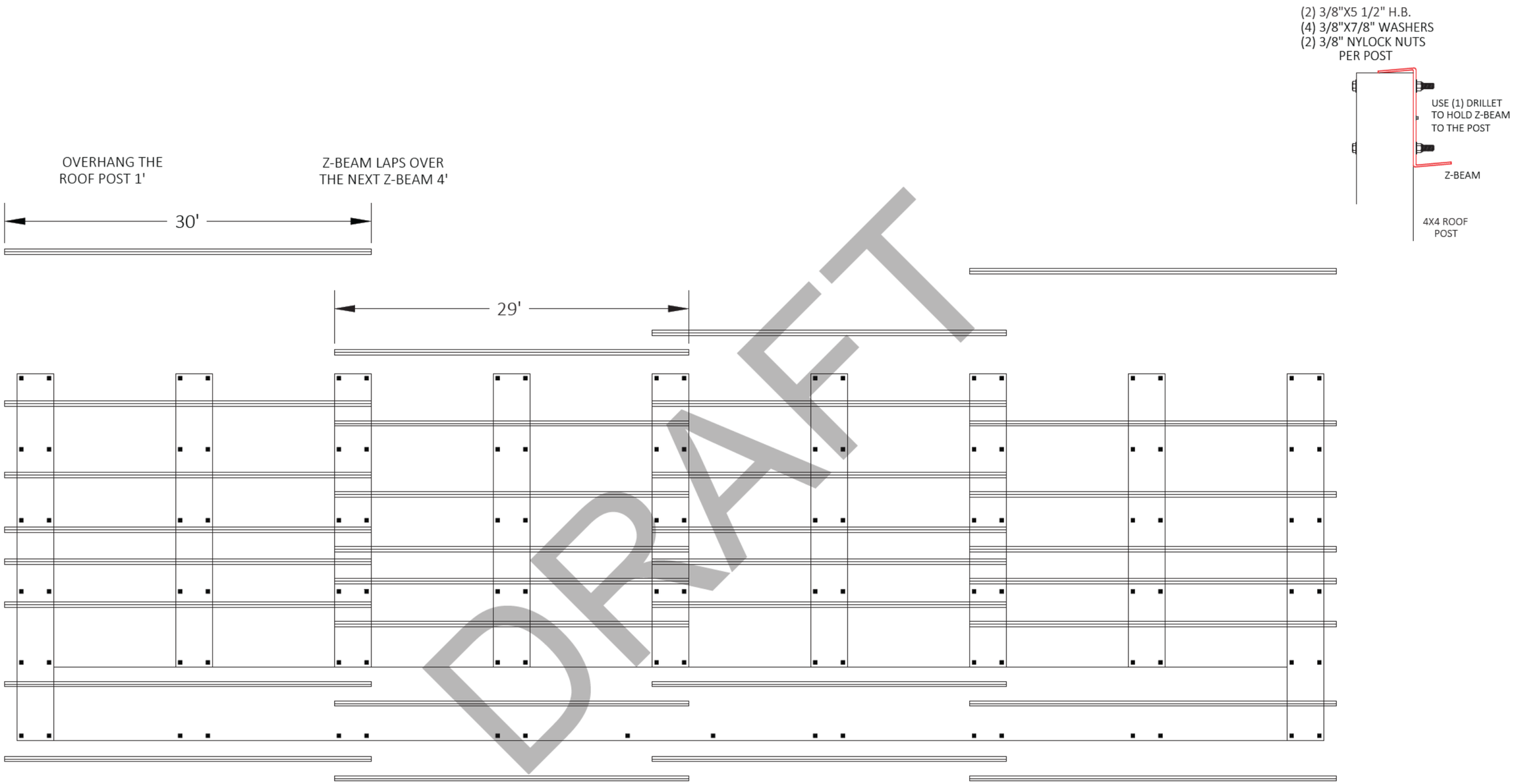


DRAFT

| | | | | |
|---|---|---|---|---|
| –SHEET DETAIL– | | | | |
| FILE NAME/CUSTOMER → | 8 SLIP THE PENINSULA LOTS16-23.dwg | | | |
| DRAWN: 9/19/2023 | FLOAT DIAGRAM | | | |
| CHECKED: | | | | |
| MANAG.APPR: | | | | |
| ISSUED TO: MANUFACTURE | | | | |
| DESIGN DRAFTER: R.BAKER | SIZE B | SCALE 1:100 | DWG TYPE/NO. | REV 0 |
| FABRICATOR: | | | SHEET 7 OF 42 | |

AUTOCAD .DWG

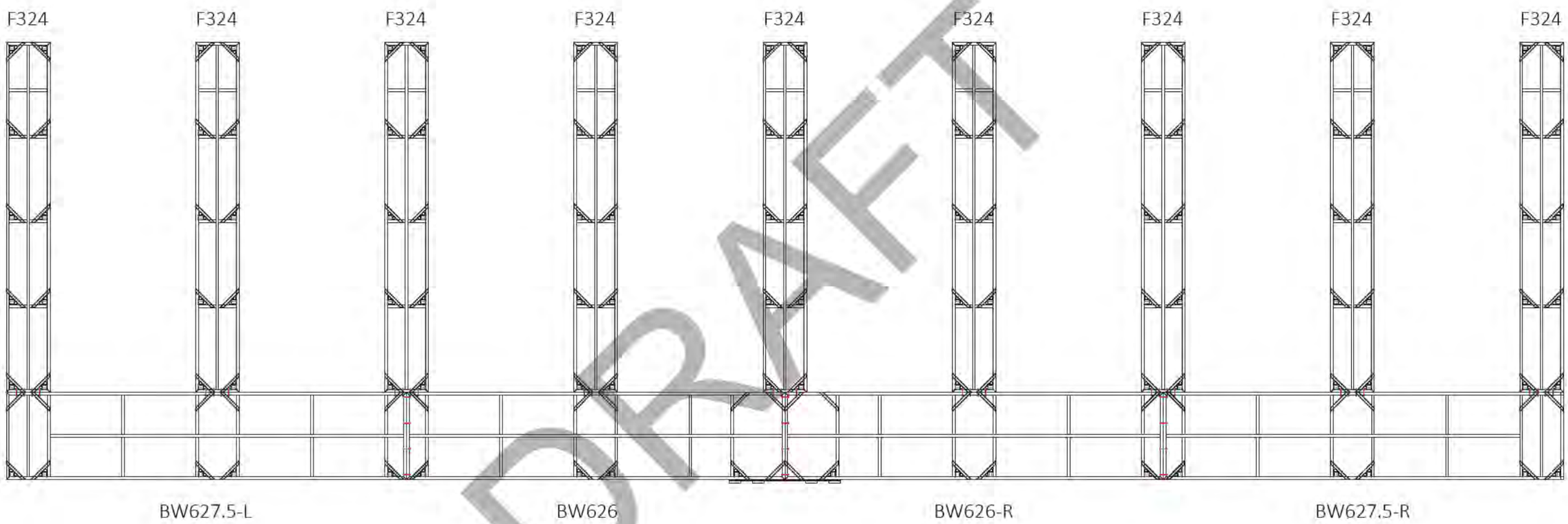


DRAFT

| | |
|---|---|
| -SHEET DETAIL- | |
| FILE NAME/CUSTOMER → | 8 SLIP THE PENINSULA LOTS16-23.dwg |
| DRAWN: 9/19/2023 | FLOAT DIAGRAM |
| CHECKED: | |
| MANAG.APPR: | |
| ISSUED TO: MANUFACTURE | |
| DESIGN DRAFTER: R.BAKER | SIZE B · SCALE 1:88 · DWG TYPE/NO. · REV 0 |
| FABRICATOR: | SHEET 8 OF 42 |

AUTOCAD .DWG

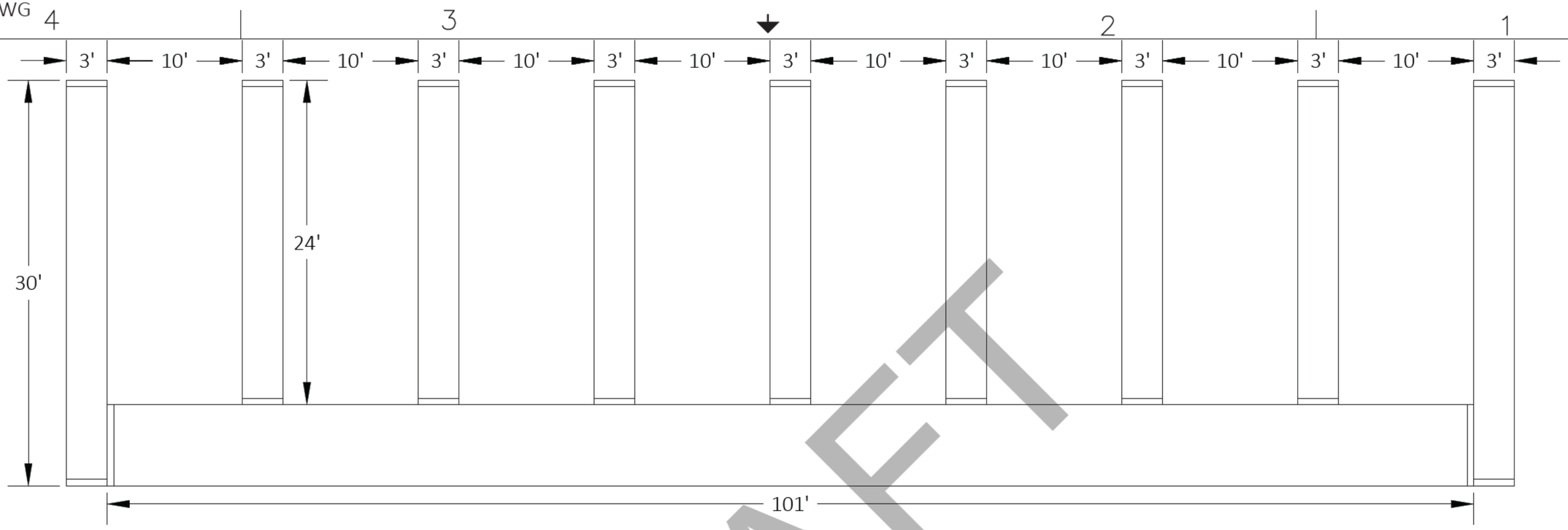


| DECKING CUT LIST | | |
|---|---|---|
| QTY. | DESCRIPTION | COLOR |
| 438 | 35-1/2" LOCKDRY MAINS | |
| 200 | 5' 11-1/2" LOCKDRY MAINS | |
| | | |
| 9 | 35-1/2" LOCKDRY STARTER | |
| 1 | 5' 11-1/2" LOCKDRY STARTER | |
| | | |
| 9 | 35-1/2" LOCKDRY FINISHER | |
| 1 | 5' 11-1/2" LOCKDRY FINISHER | |
| | | |
| | | |
| | | |
| | | |

DRAFT

| -SHEET DETAIL- | | | | |
|---|---|---|---|---|
| FILE NAME/CUSTOMER → | 8 SLIP THE PENINSULA LOTS16-23.dwg | | | |
| DRAWN: 9/19/2023 | FLOAT DIAGRAM | | | |
| CHECKED: | | | | |
| MANAG.APPR: | | | | |
| ISSUED TO: MANUFACTURE | | | | |
| DESIGN DRAFTER: R.BAKER | SIZE B | SCALE 1:100 | DWG TYPE/NO. | REV 0 |
| FABRICATOR: | | | SHEET 9 OF 42 | |

AUTOCAD .DWG

## CUT/STOCK LIST

| DIE NUMBER | ITEM | QTY. | DESCRIPTION | FT. | IN. | TOTAL FT. |
|---|---|---|---|---|---|---|
| FH-07803 | A | 36 | 4"X4" POST | 10 | 2 | 366.0000 |
| FH-07803 | B | 18 | 4"X4" POST | 10 | 8-1/16 | 192.0938 |
| FH-07803 | C | 18 | 4"X4" POST | 11 | 2-3/16 | 201.2813 |
| FH-07803 | D | 18 | 4"X4" POST | 11 | 2 3/8 | 201.5625 |
| FH-07803 | E | 18 | 4"X4" POST | 10 | 8 1/4 | 192.3750 |

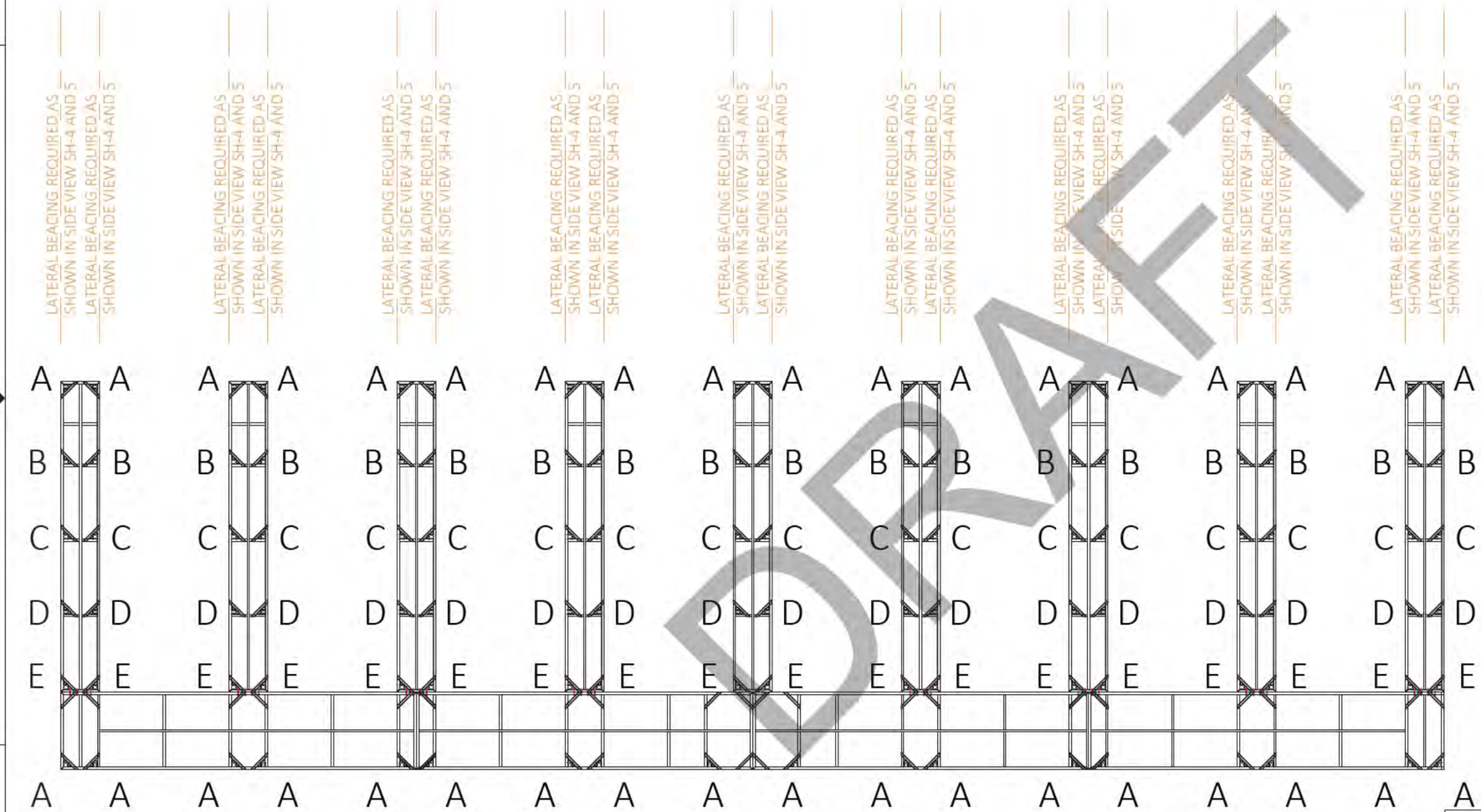


DRAFT

| | |
|---|---|
| -SHEET DETAIL- | |
| FILE NAME/CUSTOMER → | 8 SLIP THE PENINSULA LOTS16-23.dwg |
| DRAWN: 9/19/2023 | POST DIAGRAM |
| CHECKED: | |
| MANAG.APPR: | |
| ISSUED TO: MANUFACTURE | |
| DESIGN DRAFTER: R.BAKER | SIZE B · SCALE 1:120 · DWG TYPE/NO. · REV 0 |
| FABRICATOR: | SHEET 10 OF 42 |

AUTOCAD .DWG

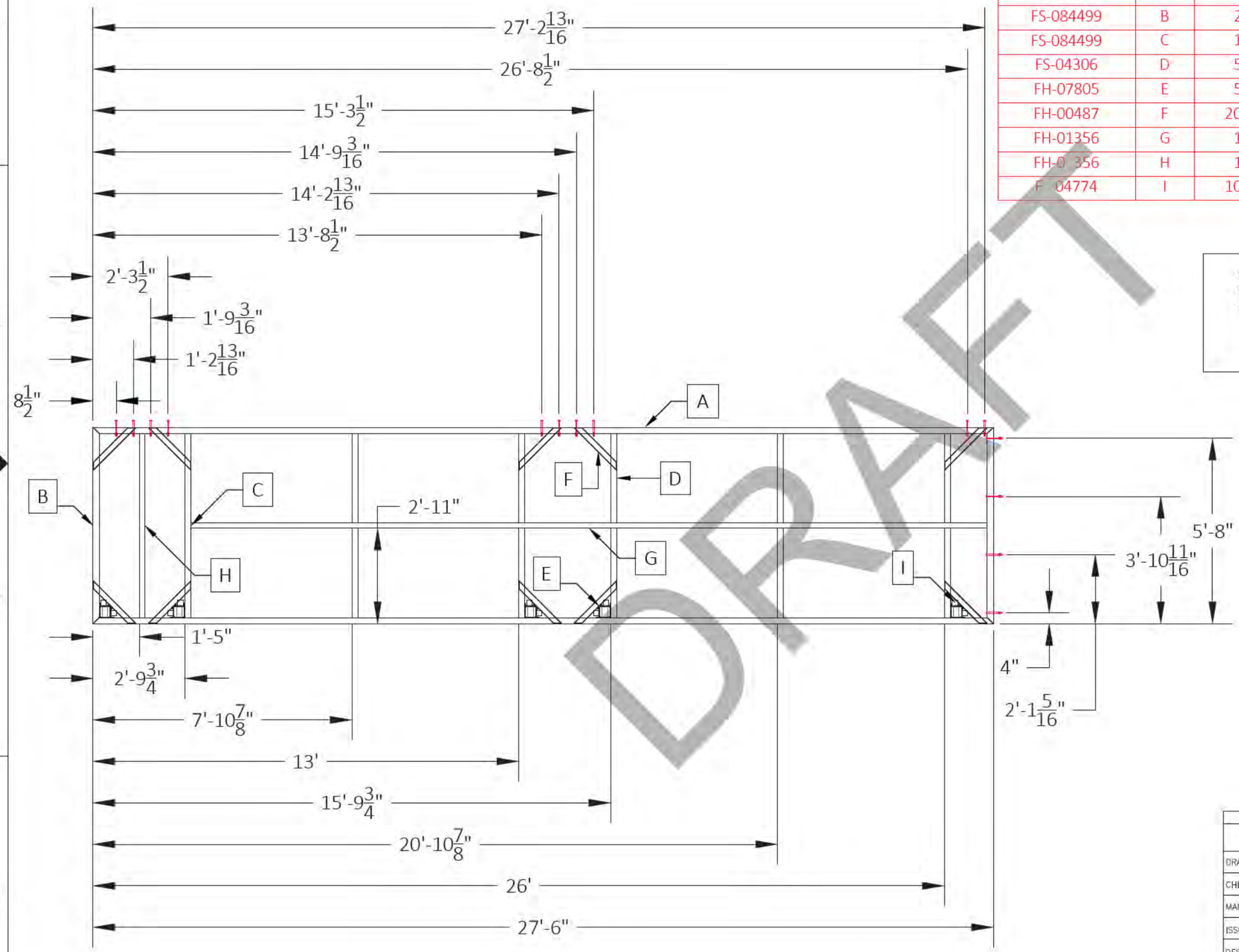


| CUT LIST | | | | | | | |
|---|---|---|---|---|---|---|---|
| DIE NUMBER | ITEM | QTY. | DESCRIPTION | DEGREE | FT | IN | TOTAL FT |
| FS-084499 | A | 2 | 10" H.W. | 45°-45° | 27 | 6" | 55.000000 |
| FS-084499 | B | 2 | 10" H.W. | 45°-45° | 6 | 0" | 12.000000 |
| FS-084499 | C | 1 | 10" H.W. | 0°-0° | 5 | 7 1/2" | ######## |
| FS-04306 | D | 5 | 8" L.W. | 0°-0° | 5 | 7 1/2" | ######### |
| FH-07805 | E | 5 | CORNER SLEEVE | 0°-0° | | 10" | 4.166667 |
| FH-00487 | F | 20 | 1"X2" GUSSET | 45°-45° | 1 | 9 13/16" | ######### |
| FH-01356 | G | 1 | 1/8" X 2" X 2" TUBE | 0°-0° | 24 | 3 3/4" | ######### |
| FH-01356 | H | 1 | 1/8" X 2" X 2" TUBE | 0°-0° | 5 | 7 1/2" | ######## |
| FH-04774 | I | 10 | 2" X 2" ANGLE | 0°-0° | | 2" | 1.666667 |

NOTE:
USE .375 WELD OF APPROPRIATE TYPE PER SHOP STANDARD (TYP.) OR AS NOTED

.375

DRAFT

| -SHEET DETAIL- | | | | |
|---|---|---|---|---|
| FILE NAME/CUSTOMER → | 8 SLIP THE PENINSULA LOTS16-23.dwg | | | |
| DRAWN: 9/19/2023 | BW627.5-L | | | |
| CHECKED: | | | | |
| MANAG.APPR: | | | | |
| ISSUED TO: MANUFACTURE | | | | |
| DESIGN DRAFTER: R.BAKER | SIZE B | SCALE 1:40 | DWG TYPE/NO. | REV 0 |
| FABRICATOR: | | | SHEET 11 OF 42 | |

AUTOCAD .DWG

| CUT LIST | | | | | | | |
|---|---|---|---|---|---|---|---|
| DIE NUMBER | ITEM | QTY. | DESCRIPTION | DEGREE | FT | IN | TOTAL FT |
| FS-084499 | A | 2 | 10" H.W. | 45°-45° | 26 | 0 | 52.000000 |
| FS-084499 | B | 2 | 10" H.W. | 45°-45° | 6 | 0" | 12.000000 |
| FS-04306 | C | 6 | 8" L.W. | 0°-0° | 5 | 7 1/2" | ######### |
| FH-07805 | D | 4 | CORNER SLEEVE | 0°-0° | | 10" | 3.333333 |
| FH-00487 | E | 20 | 1"X2" GUSSET | 45°-45° | 1 | 9 13/16" | ######### |
| FH-01356 | F | 1 | 1/8" X 2" X 2" TUBE | 0°-0° | 25 | 7 1/2" | ######### |
| FS-04774 | G | 16 | 2" X 2" ANGLE | 0°-0° | | 2" | 2.666667 |

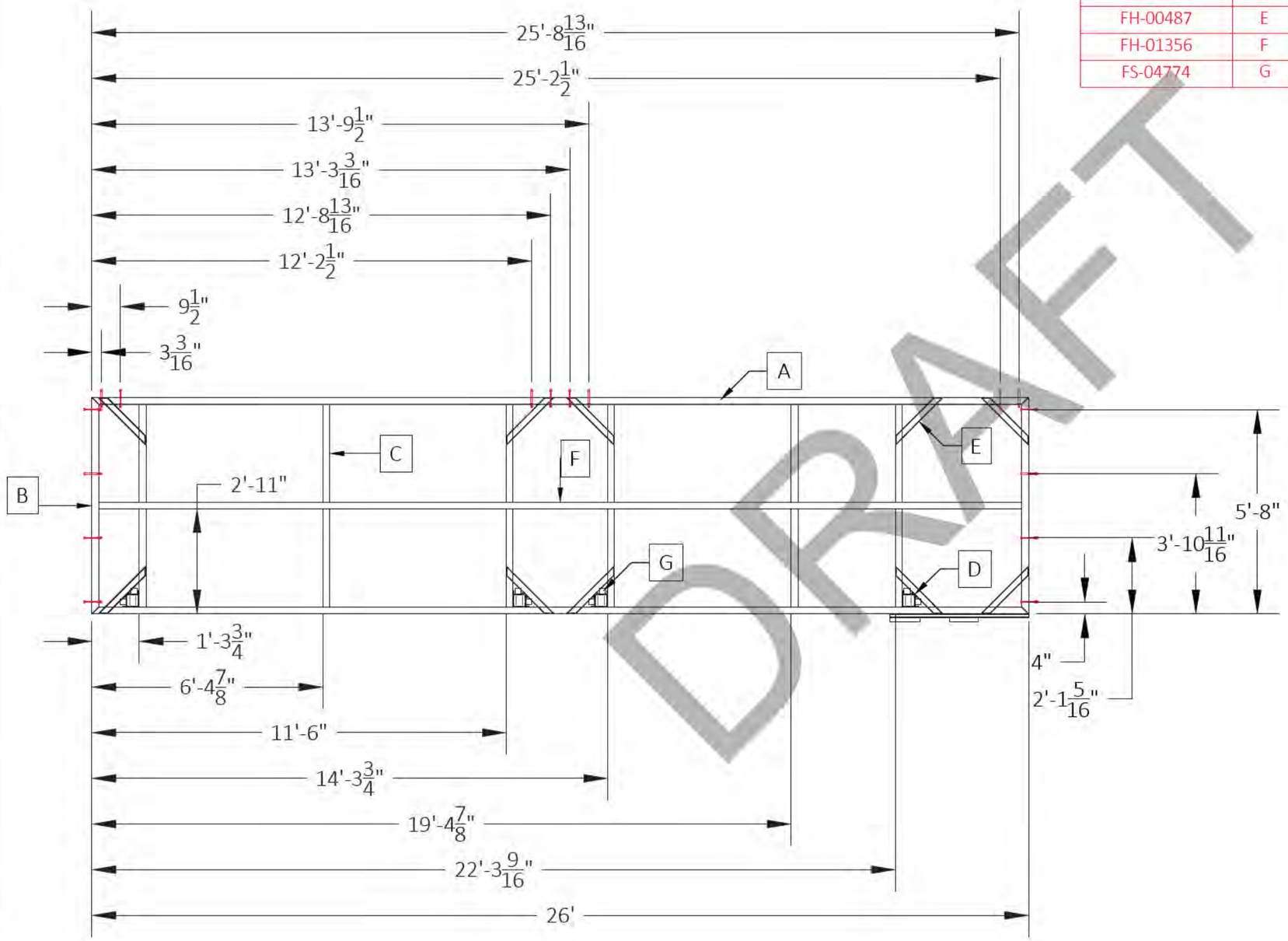


NOTE:
USE .375 WELD OF APPROPRIATE TYPE PER SHOP STANDARD (TYP.) OR AS NOTED

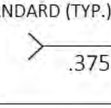

DRAFT

| | |
|---|---|
| –SHEET DETAIL– | |
| FILE NAME/CUSTOMER → | 8 SLIP THE PENINSULA LOTS16-23.dwg |
| DRAWN: 9/19/2023 | BW626-L |
| CHECKED: | |
| MANAG.APPR: | |
| ISSUED TO: MANUFACTURE | |
| DESIGN DRAFTER: R.BAKER | SIZE B · SCALE 1:40 · DWG TYPE/NO. · REV 0 |
| FABRICATOR: | SHEET 12 OF 42 |

AUTOCAD .DWG

| CUT LIST | | | | | | | |
|---|---|---|---|---|---|---|---|
| DIE NUMBER | ITEM | QTY. | DESCRIPTION | DEGREE | FT | IN | TOTAL FT |
| FH-07812 | A | 1 | RAMP PIPE | 0°-0° | | 10" | 0.83 |
| FH-07812 | B | 1 | RAMP PIPE | 0°-0° | | 9 9/16" | #### |
| FS-07813 | C | 1 | RAMP TRACK | 0°-0° | 3 | 10 1/8" | #### |
| FS-08499 | D | 1 | 10" H.W. | 0°-0° | | 7" | 0.58 |
| FS-00431 | E | 1 | 8" H.W. | 0°-0° | | 7" | 0.58 |

*MEASUREMENTS MUST BE EXACT!

WELD THE RAMP TRACK TO THE FRAME!!

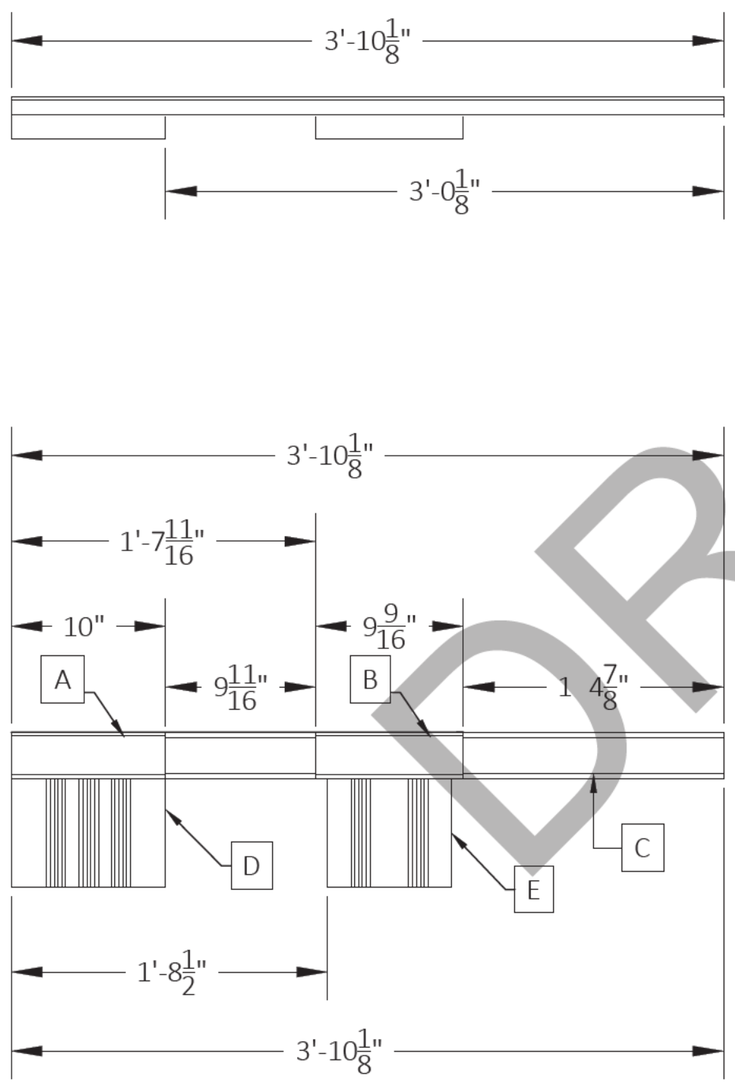


NOTE:
USE .375 WELD OF APPROPRIATE TYPE PER SHOP STANDARD (TYP.) OR AS NOTED

DRAFT

| -SHEET DETAIL- | | | | |
|---|---|---|---|---|
| FILE NAME/CUSTOMER → | 8 SLIP THE PENINSULA LOTS16-23.dwg | | | |
| DRAWN: 9/19/2023 | BW626-L ATTACHMENT SHEET | | | |
| CHECKED: | | | | |
| MANAG.APPR: | | | | |
| ISSUED TO: MANUFACTURE | | | | |
| DESIGN DRAFTER: R.BAKER | SIZE B | SCALE 1:10 | DWG TYPE/NO. | REV 0 |
| FABRICATOR: | | | | SHEET 13 OF 42 |

AUTOCAD .DWG

| CUT LIST | | | | | | | |
|---|---|---|---|---|---|---|---|
| DIE NUMBER | ITEM | QTY. | DESCRIPTION | DEGREE | FT | IN | TOTAL FT |
| FS-084499 | A | 2 | 10" H.W. | 45°-45° | 26 | 0 | 52.000000 |
| FS-084499 | B | 2 | 10" H.W. | 45°-45° | 6 | 0" | 12.000000 |
| FS-04306 | C | 6 | 8" L.W. | 0°-0° | 5 | 7 1/2" | ######### |
| FH-07805 | D | 4 | CORNER SLEEVE | 0°-0° | | 10" | 3.333333 |
| FH-00487 | E | 20 | 1"X2" GUSSET | 45°-45° | 1 | 9 13/16" | ######### |
| FH-01356 | F | 1 | 1/8" X 2" X 2" TUBE | 0°-0° | 25 | 7 1/2" | ######### |
| FS-0[illegible]74 | G | 16 | 2" X 2" ANGLE | 0°-0° | | 2" | 2.666667 |

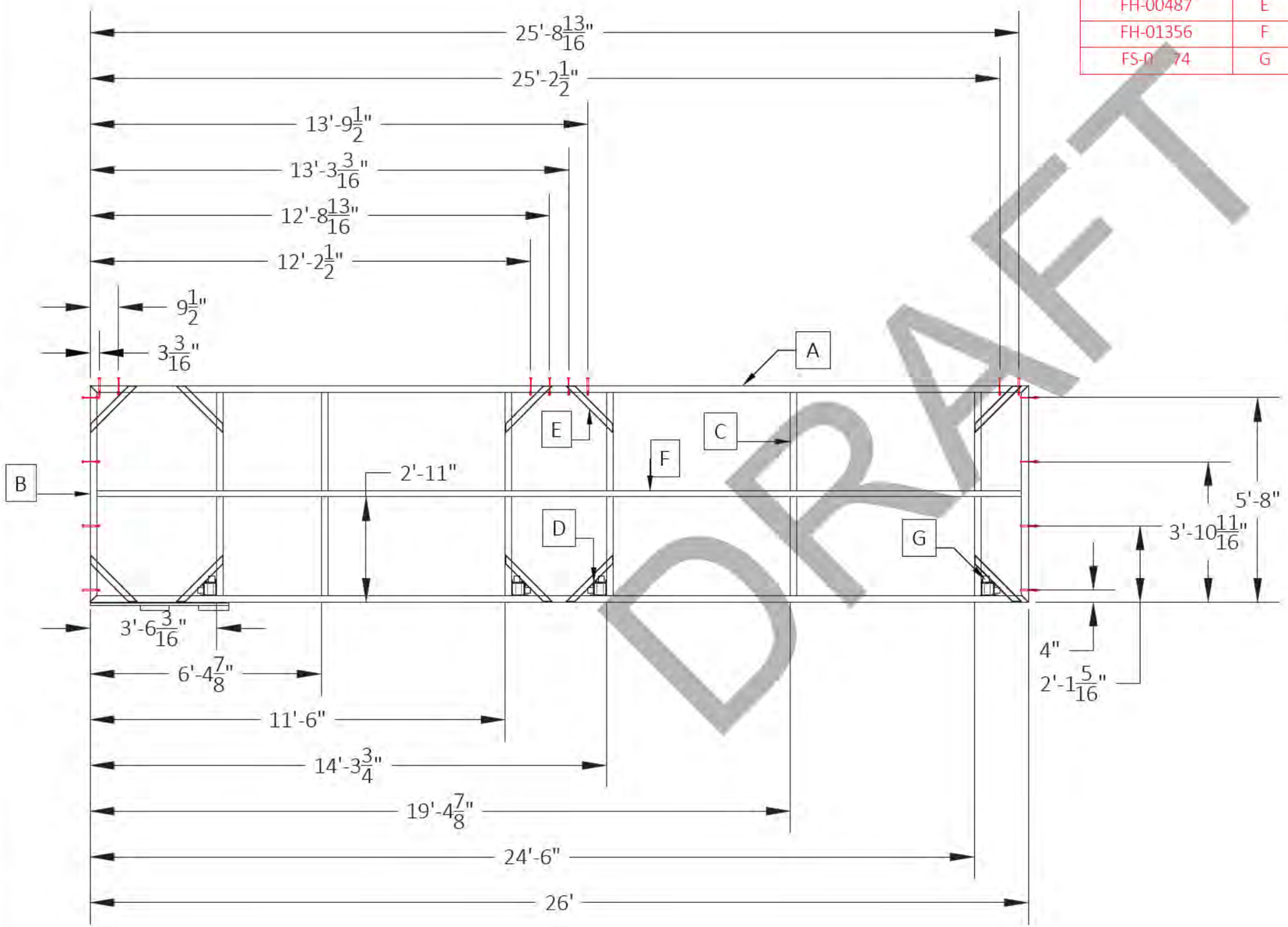


NOTE:
USE .375 WELD OF APPROPRIATE TYPE PER SHOP STANDARD (TYP.) OR AS NOTED

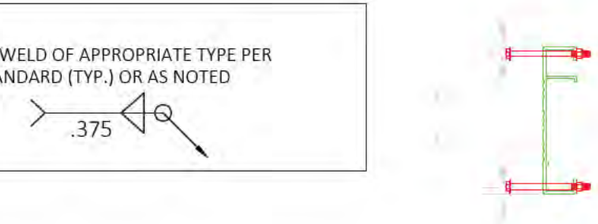




DRAFT

| -SHEET DETAIL- | | | | |
|---|---|---|---|---|
| FILE NAME/CUSTOMER → | 8 SLIP THE PENINSULA LOTS16-23.dwg | | | |
| DRAWN: 9/19/2023 | BW626-R | | | |
| CHECKED: | | | | |
| MANAG.APPR: | | | | |
| ISSUED TO: MANUFACTURE | | | | |
| DESIGN DRAFTER: R.BAKER | SIZE B | SCALE 1:40 | DWG TYPE/NO. | REV 0 |
| FABRICATOR: | | | SHEET 14 OF 42 | |

AUTOCAD .DWG

| CUT LIST | | | | | | | |
|---|---|---|---|---|---|---|---|
| DIE NUMBER | ITEM | QTY. | DESCRIPTION | DEGREE | FT | IN | TOTAL FT |
| FH-07812 | A | 1 | RAMP PIPE | 0°-0° | | 10" | 0.83 |
| FH-07812 | B | 1 | RAMP PIPE | 0°-0° | | 9 9/16" | #### |
| FS-07813 | C | 1 | RAMP TRACK | 0°-0° | 3 | 10 1/8" | #### |
| FS-08499 | D | 1 | 10" H.W. | 0°-0° | | 7" | 0.58 |
| FS-00431 | E | 1 | 8" H.W. | 0°-0° | | 7" | 0.58 |

*MEASUREMENTS MUST BE EXACT!

WELD THE RAMP TRACK TO THE FRAME!!

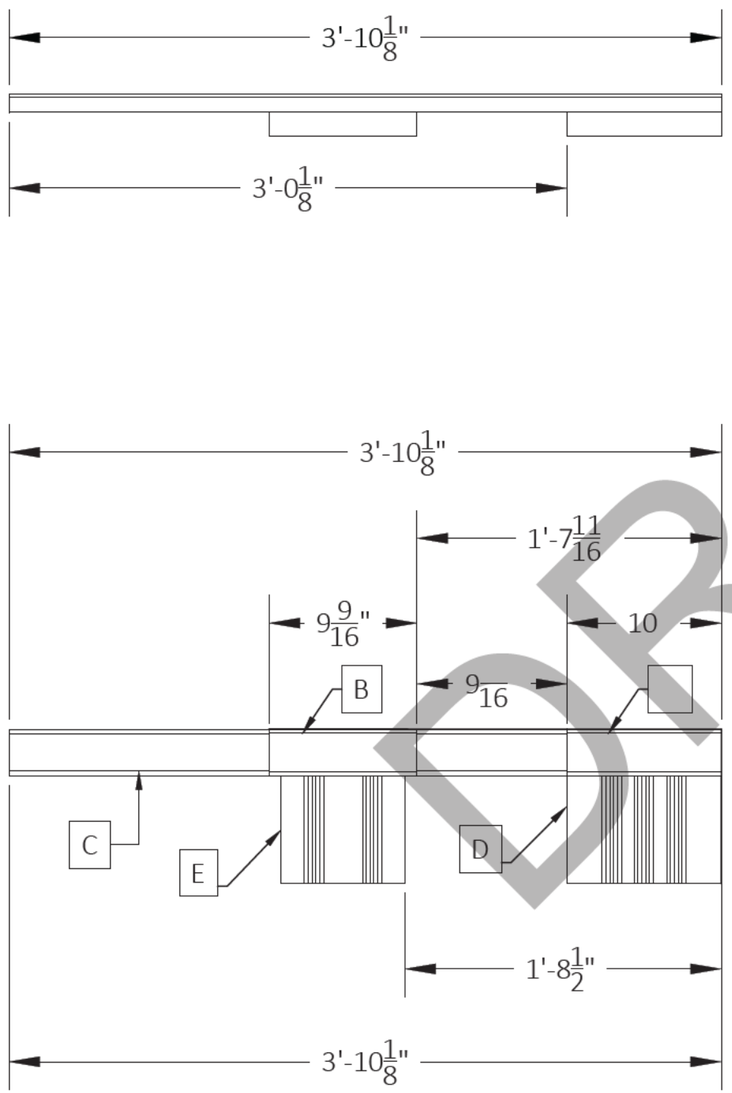


NOTE:
USE .375 WELD OF APPROPRIATE TYPE PER SHOP STANDARD (TYP.) OR AS NOTED

DRAFT

| -SHEET DETAIL- | | | | |
|---|---|---|---|---|
| FILE NAME/CUSTOMER → | 8 SLIP THE PENINSULA LOTS16-23.dwg | | | |
| DRAWN: 9/19/2023 | BW626-R<br>ATTACHMENT SHEET | | | |
| CHECKED: | | | | |
| MANAG.APPR: | | | | |
| ISSUED TO: MANUFACTURE | | | | |
| DESIGN DRAFTER: R.BAKER | SIZE B | SCALE 1:10 | DWG TYPE/NO. | REV 0 |
| FABRICATOR: | | | SHEET 15 OF 42 | |

AUTOCAD .DWG

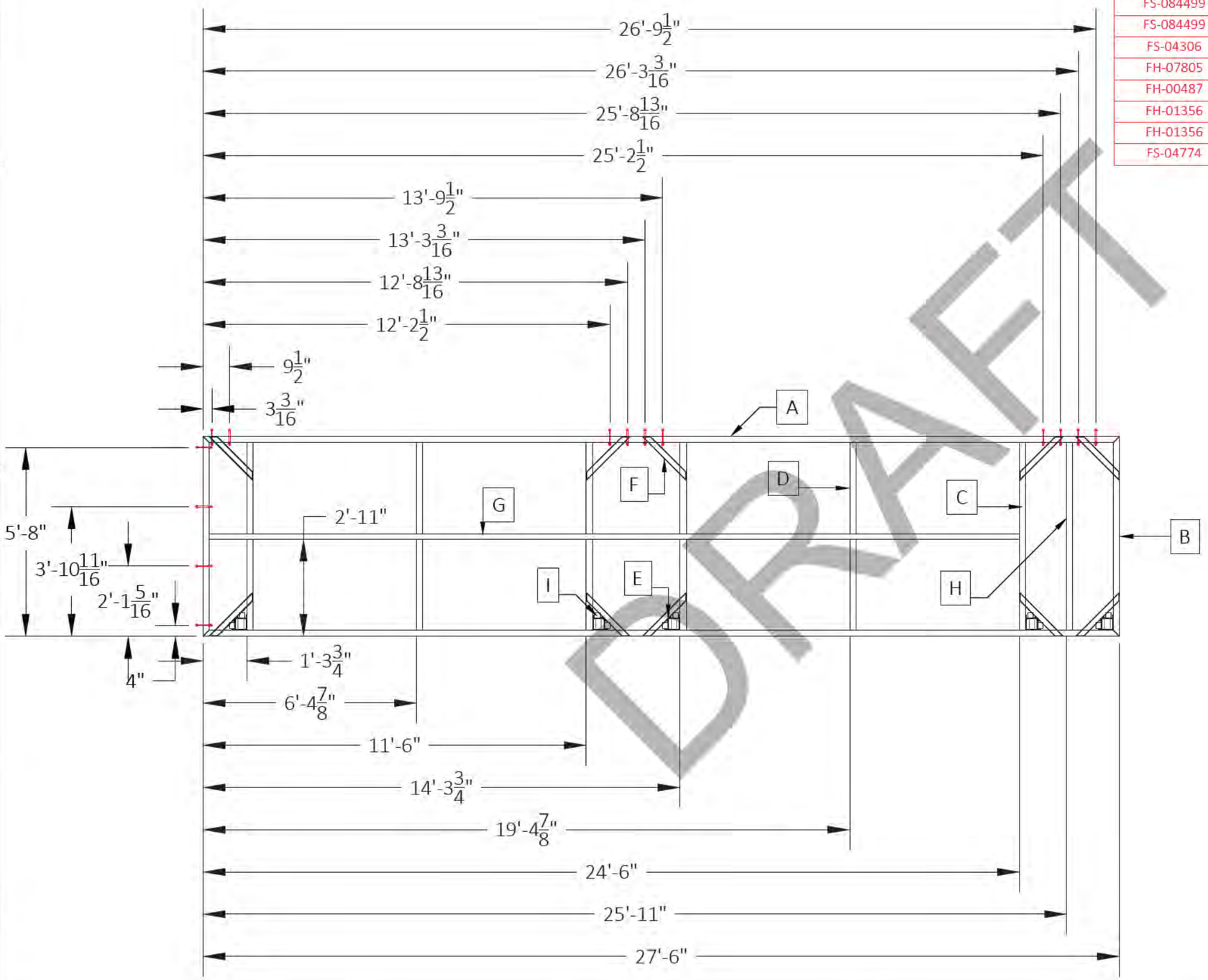


DRAFT

| CUT LIST | | | | | | | |
|---|---|---|---|---|---|---|---|
| DIE NUMBER | ITEM | QTY. | DESCRIPTION | DEGREE | FT | IN | TOTAL FT |
| FS-084499 | A | 2 | 10" H.W. | 45°-45° | 27 | 6" | 55.000000 |
| FS-084499 | B | 2 | 10" H.W. | 45°-45° | 6 | 0" | 12.000000 |
| FS-084499 | C | 1 | 10" H.W. | 0°-0° | 5 | 7 1/2" | ######## |
| FS-04306 | D | 5 | 8" L.W. | 0°-0° | 5 | 7 1/2" | ######### |
| FH-07805 | E | 5 | CORNER SLEEVE | 0°-0° | | 10" | 4.166667 |
| FH-00487 | F | 20 | 1"X2" GUSSET | 45°-45° | 1 | 9 13/16" | ######### |
| FH-01356 | G | 1 | 1/8" X 2" X 2" TUBE | 0°-0° | 24 | 3 3/4" | ######### |
| FH-01356 | H | 1 | 1/8" X 2" X 2" TUBE | 0°-0° | 5 | 7 1/2" | ######## |
| FS-04774 | I | 10 | 2" X 2" ANGLE | 0°-0° | | 2" | 1.666667 |

NOTE:
USE .375 WELD OF APPROPRIATE TYPE PER SHOP STANDARD (TYP.) OR AS NOTED

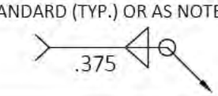


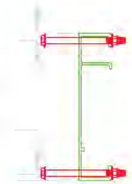

| -SHEET DETAIL- | | | | |
|---|---|---|---|---|
| FILE NAME/CUSTOMER → | 8 SLIP THE PENINSULA LOTS16-23.dwg | | | |
| DRAWN: 9/19/2023 | BW627.5-R | | | |
| CHECKED: | | | | |
| MANAG.APPR: | | | | |
| ISSUED TO: MANUFACTURE | | | | |
| DESIGN DRAFTER: R.BAKER | SIZE B | SCALE 1:40 | DWG TYPE/NO. | REV 0 |
| FABRICATOR: | | | | SHEET 16 OF 42 |

AUTOCAD .DWG

## CUT/STOCK LIST

| DIE NUMBER | ITEM | QTY. | DESCRIPTION | DEGREE | FT. | IN. | TOTAL FT. |
|---|---|---|---|---|---|---|---|
| FS-084499 | A | 18 | 10" H.W. | 45°-45° | 24 | 0" | 432.00 |
| FS-084499 | B | 18 | 10" H.W. | 45°-45° | 3 | 0" | 54.00 |
| FS-04306 | C | 36 | 8" L.W. | 0°-0° | 2 | 7 1/2" | ##### |
| FH-07805 | D | 90 | CORNER SLEEVE | 0°-0° | | 10" | 75.00 |
| FH-00487 | E | 180 | 1"X2" GUSSET | 45°-45° | 1 | 9 13/16" | ###### |
| FH-01356 | F | 9 | 1/8" X 2" X 2" TUBE | 0°-0° | 23 | 7 1/2" | ###### |
| S-04774 | G | 108 | 2" X 2" ANGLE | 0°-0° | | 2" | 18.00 |

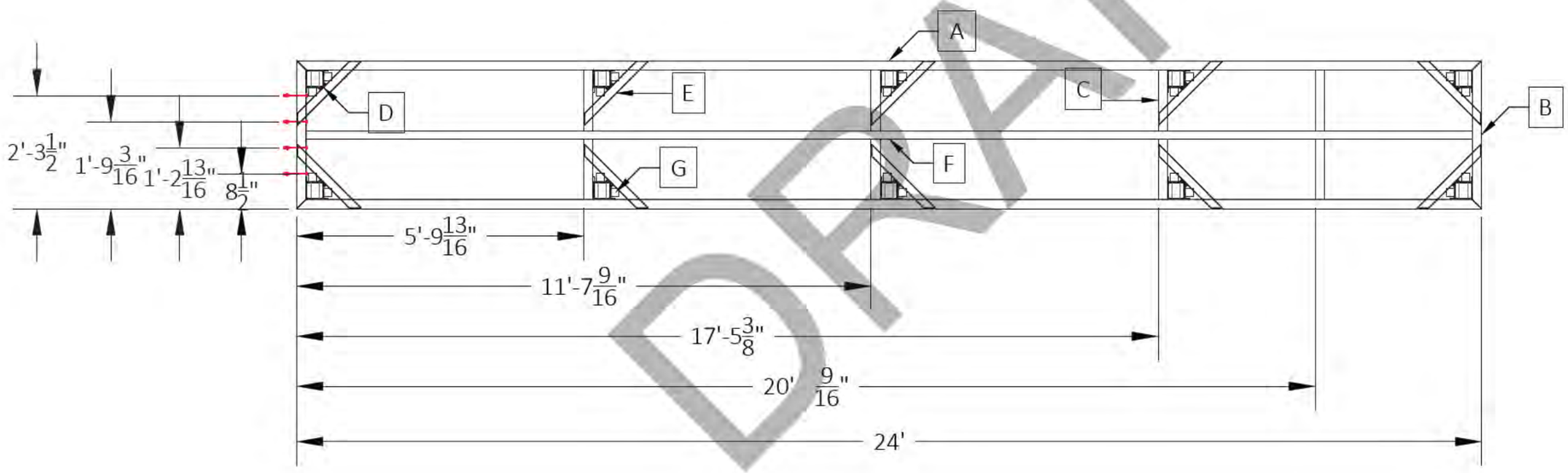


DRAFT

| | |
|---|---|
| –SHEET DETAIL– | |
| FILE NAME/CUSTOMER → | 8 SLIP THE PENINSULA LOTS16-23.dwg |
| DRAWN: 9/19/2023 | F324 |
| CHECKED: | 9 (REQ) |
| MANAG.APPR: | |
| ISSUED TO: MANUFACTURE | |
| DESIGN DRAFTER: R.BAKER | SIZE B · SCALE 1:32 · DWG TYPE/NO. · REV 0 |
| FABRICATOR: | SHEET 17 OF 42 |

AUTOCAD .DWG

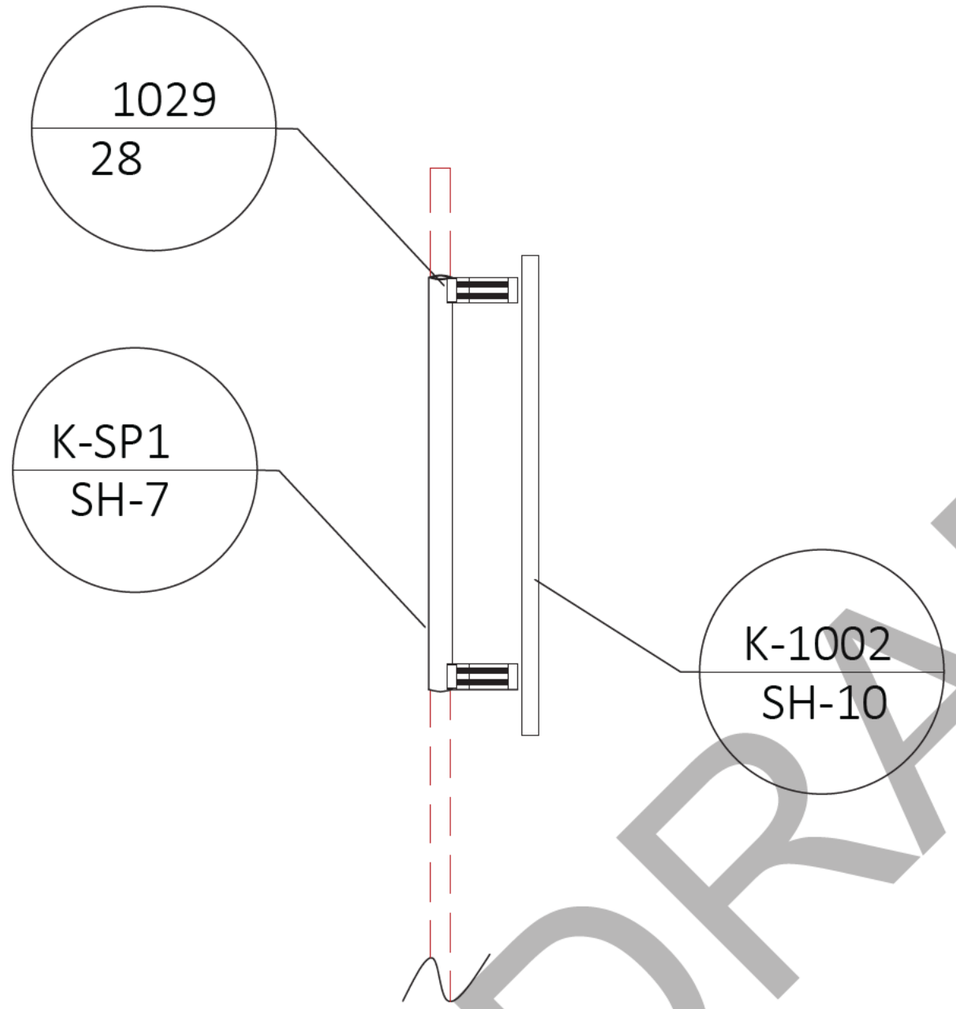


INSERT STUB-UP MATERIAL AS SHOWN IN POST TO WHICH SPUD POLE SLEEVES ATTACH. FASTEN USING A DRILLET TO HOLD IN PLACE DURING INSTALLATION.
SEE SH-3C FOR SLEEVE LOCATION

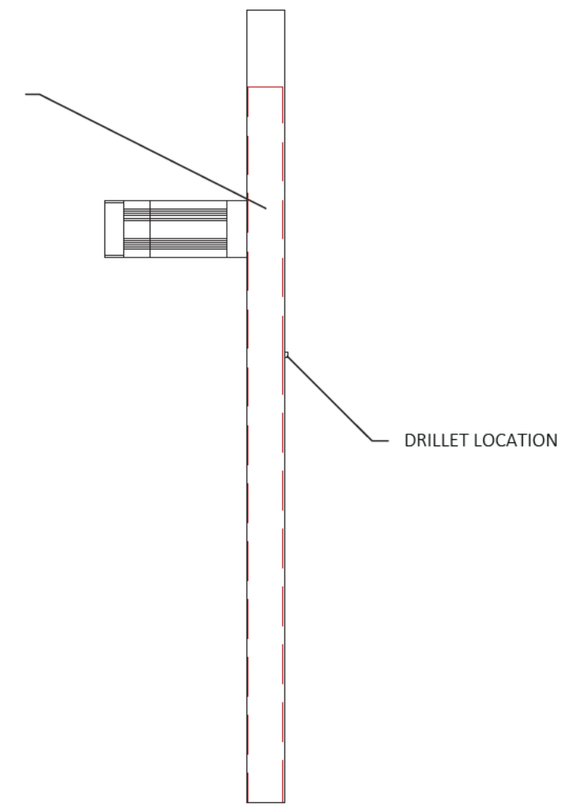


FLUSH WITH THE BOTTOM OF THE POST

DRAFT

K-SP1 ASSEMBLIES ARE TO BE BOLTED TO THE FRAMES AND POST AT THE SPECIFICALLY MARKED PLACES.

| -SHEET DETAIL- | | | | |
|---|---|---|---|---|
| FILE NAME/CUSTOMER → | 8 SLIP THE PENINSULA LOTS16-23.dwg | | | |
| DRAWN: 9/19/2023 | 8' COLLAR SIDE VIEW | | | |
| CHECKED: | | | | |
| MANAG.APPR: | | | | |
| ISSUED TO: MANUFACTURE | | | | |
| DESIGN DRAFTER: R.BAKER | SIZE B | SCALE 1:36 | DWG TYPE/NO. | REV 0 |
| FABRICATOR: | | | | SHEET 18 OF 42 |

AUTOCAD .DWG

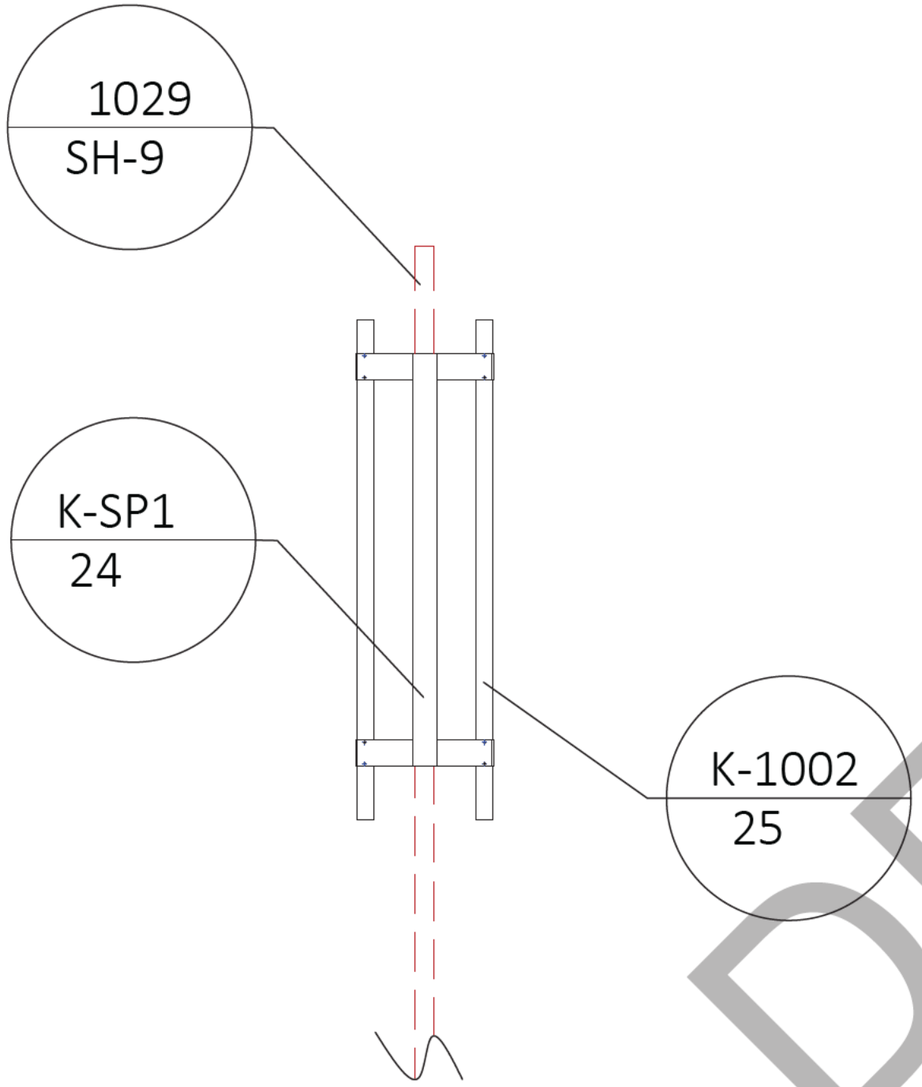


INSERT STUB-UP MATERIAL AS SHOWN
IN POST TO WHICH SPUD POLE
SLEEVES ATTACH. FASTEN USING
A DRILLET TO HOLD IN PLACE
DURING INSTALLATION.
SEE SH-3C FOR SLEEVE LOCATION

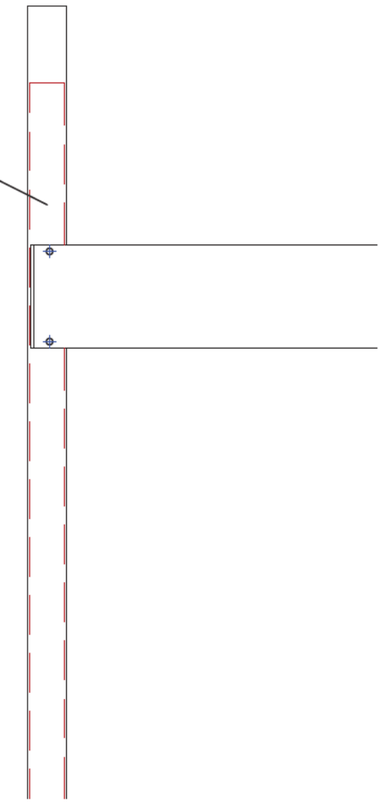

FLUSH WITH THE
BOTTOM OF THE POST

DRAFT

K-SP1 ASSEMBLIES ARE TO BE BOLTED
TO THE FRAMES AND POST AT THE
SPECIFICALLY MARKED PLACES.

| | | | | |
|---|---|---|---|---|
| –SHEET DETAIL– | | | | |
| FILE NAME/CUSTOMER → | 8 SLIP THE PENINSULA LOTS16-23.dwg | | | |
| DRAWN: 9/19/2023 | 8' COLLAR<br>SIDE VIEW | | | |
| CHECKED: | | | | |
| MANAG.APPR: | | | | |
| ISSUED TO: MANUFACTURE | | | | |
| DESIGN DRAFTER: R.BAKER | SIZE B | SCALE 1:36 | DWG TYPE/NO. | REV 0 |
| FABRICATOR: | | | | SHEET 19 OF 42 |

AUTOCAD .DWG

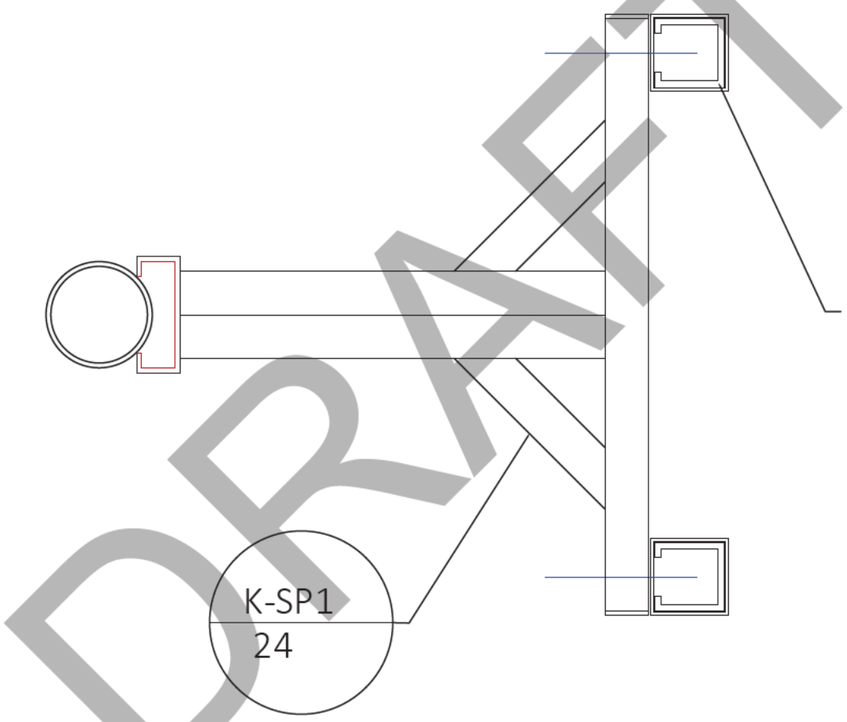


INSERT STUB-UP MATERIAL AS SHOWN
IN POST TO WHICH SPUD POLE
SLEEVES ATTACH. FASTEN USING
A DRILLET TO HOLD IN PLACE
DURING INSTALLATION.
SEE SH-10 FOR SLEEVE LOCATION

K-SP1 ASSEMBLIES ARE TO BE BOLTED
TO THE FRAMES AND POST AT THE
SPECIFICALLY MARKED PLACES.

DRAFT

| -SHEET DETAIL- | | | | |
|---|---|---|---|---|
| FILE NAME/CUSTOMER → | 8 SLIP THE PENINSULA LOTS16-23.dwg | | | |
| DRAWN: 9/19/2023 | 8' COLLAR<br>SIDE VIEW | | | |
| CHECKED: | | | | |
| MANAG.APPR: | | | | |
| ISSUED TO: MANUFACTURE | | | | |
| DESIGN DRAFTER: R.BAKER | SIZE B | SCALE 1:8 | DWG TYPE/NO. | REV 0 |
| FABRICATOR: | | | SHEET 20 OF 42 | |

AUTOCAD .DWG

| CUT/STOCK LIST | | | | | | | |
|---|---|---|---|---|---|---|---|
| DIE NUMBER | ITEM | QTY. | DESCRIPTION | DEGREE | FT. | IN. | TOTAL FT. |
| FH-04827 | A | 1 | 5" SCH. 40 ALUM PIPE | 0°-0° | 8 | 2" | 8.17 |
| FS-04739 | B | 2 | 6" H.W. | 0°-0° | | 5 1/2" | #### |
| FS-00490 | C | 4 | $\frac{1}{4}$" X 2 $\frac{1}{4}$" PRE-CUT PLATE | 0°-0° | | 6" | 2.00 |
| FS-04739 | D | 4 | 6" H.W. | 0°-0° | 1 | 10" | 7.33 |
| FS-04739 | E | 2 | 6" H.W. | 0°-0° | 2 | 6 5/8" | #### |
| FS-04739 | F | 4 | 6" H.W. | 45°-45° | | 11 1/16" | #### |
| FS-00678 | G | 4 | $\frac{1}{4}$" X 6" FLAT PLATE | 0°-0° | | 2 1/4" | #### |

SIDE VIEW

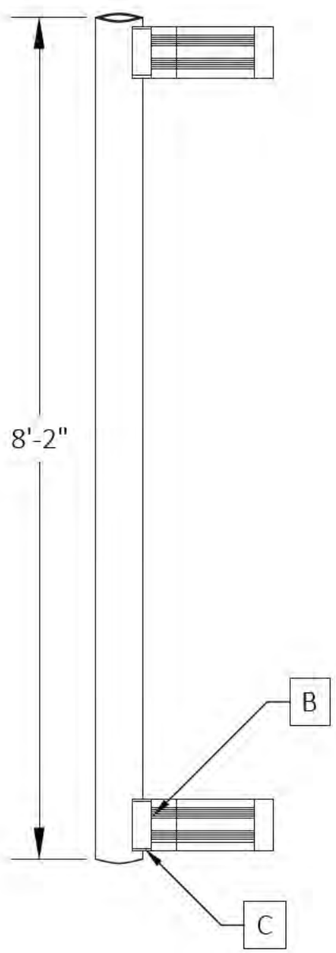


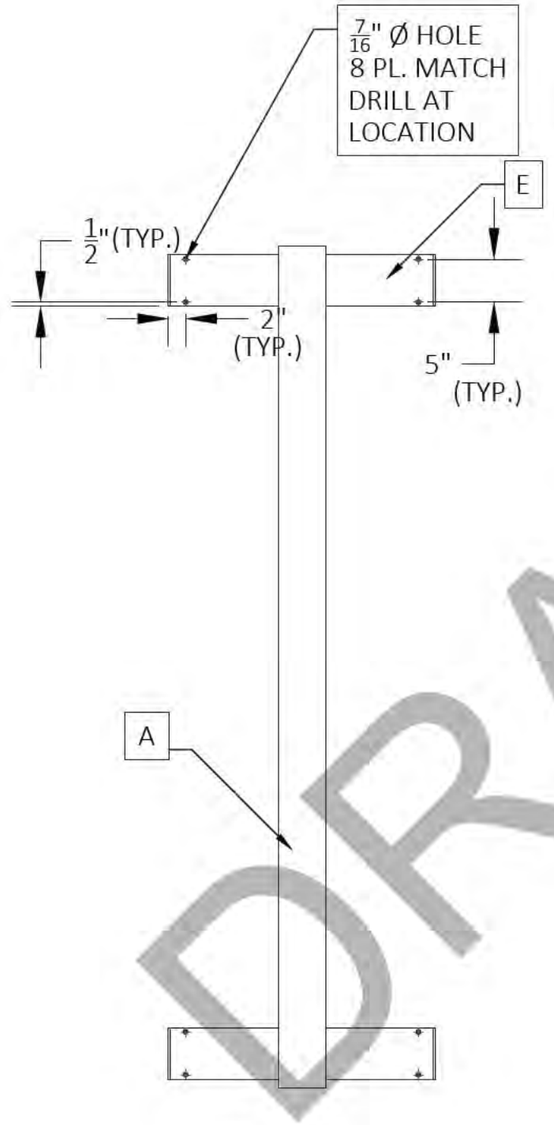


FRONT VIEW

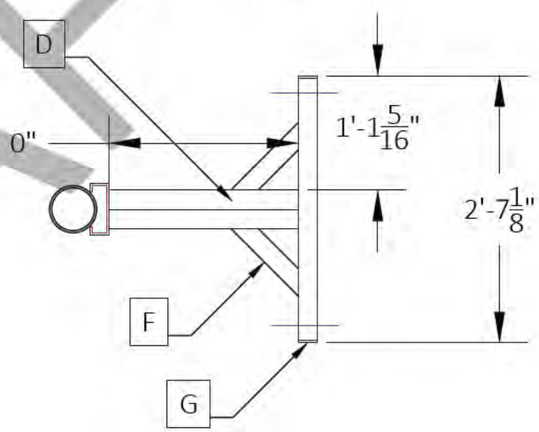


PLAN VIEW

DRAFT

K-SP1

(17)REQUIRED

K-SP1 ASSEMBLIES ARE TO BE BOLTED TO THE FRAMES AND POST AT THE SPECIFICALLY MARKED PLACES.

| -SHEET DETAIL- | | | | |
|---|---|---|---|---|
| FILE NAME/CUSTOMER → | 8 SLIP THE PENINSULA LOTS16-23.dwg | | | |
| DRAWN: 9/19/2023 | 8' COLLAR SIDE VIEW | | | |
| CHECKED: | | | | |
| MANAG.APPR: | | | | |
| ISSUED TO: MANUFACTURE | | | | |
| DESIGN DRAFTER: R.BAKER | SIZE B | SCALE 1:18 | DWG TYPE/NO. | REV 0 |
| FABRICATOR: | | | SHEET 21 OF 42 | |

AUTOCAD .DWG

| CUT/STOCK LIST | | | | | | | |
|---|---|---|---|---|---|---|---|
| DIE NUMBER | ITEM | QTY. | DESCRIPTION | DEGREE | FT. | IN. | TOTAL FT. |
| FH-07908 | A | 36 | 4" STUP UP | 0°-0° | 9 | 4 | 336.0000 |

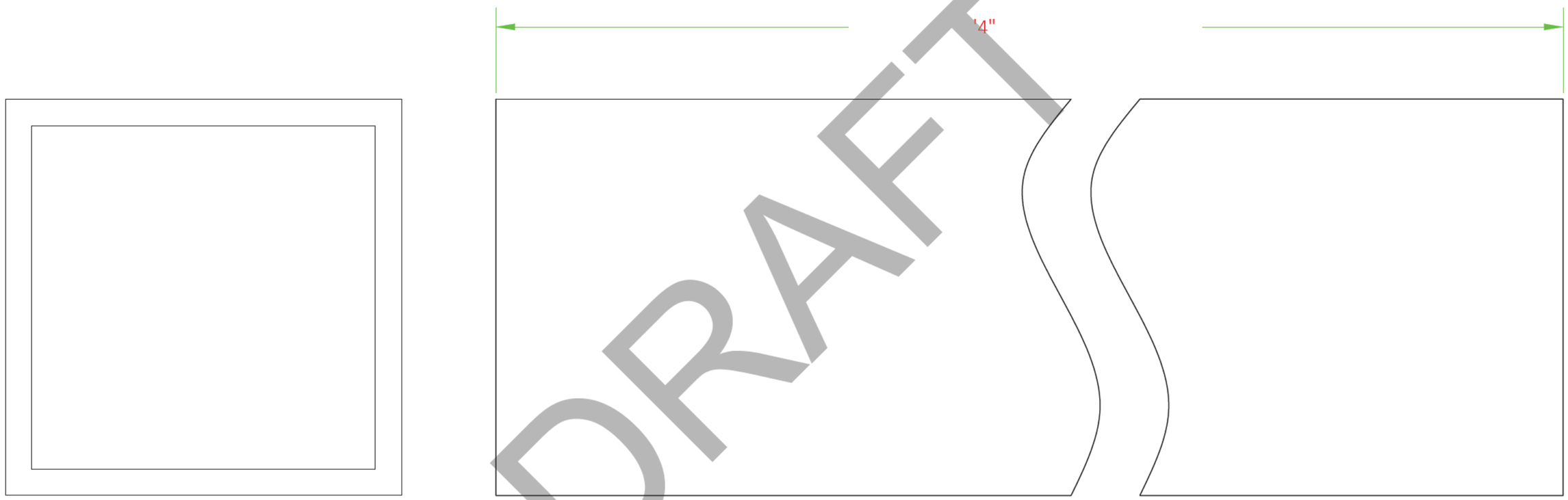


DRAFT

K-1002

| -SHEET DETAIL- | | | | |
|---|---|---|---|---|
| FILE NAME/CUSTOMER → | 8 SLIP THE PENINSULA LOTS16-23.dwg | | | |
| DRAWN: 9/19/2023 | 8' COLLAR SIDE VIEW | | | |
| CHECKED: | | | | |
| MANAG.APPR: | | | | |
| ISSUED TO: MANUFACTURE | | | | |
| DESIGN DRAFTER: R.BAKER | SIZE B | SCALE 1:1 | DWG TYPE/NO. | REV 0 |
| FABRICATOR: | | | | SHEET 22 OF 42 |

AUTOCAD .DWG

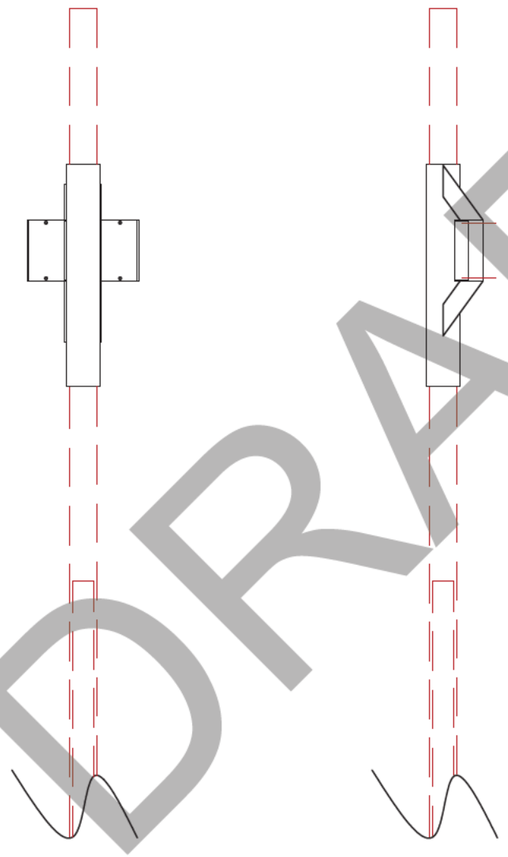

DRAFT

| -SHEET DETAIL- | | | | |
|---|---|---|---|---|
| FILE NAME/CUSTOMER → | 8 SLIP THE PENINSULA LOTS16-23.dwg | | | |
| DRAWN: 9/19/2023 | 3' COLLAR VIEWS | | | |
| CHECKED: | | | | |
| MANAG.APPR: | | | | |
| ISSUED TO: MANUFACTURE | | | | |
| DESIGN DRAFTER: R.BAKER | SIZE B | SCALE 1:25 | DWG TYPE/NO. | REV 0 |
| FABRICATOR: | | | SHEET 23 OF 42 | |

AUTOCAD .DWG

| CUT/STOCK LIST | | | | | | | |
|---|---|---|---|---|---|---|---|
| DIE NUMBER | ITEM | QTY. | DESCRIPTION | DEGREE | FT. | IN. | TOTAL FT. |
| FH-04827 | A | 2 | 5" SCH. 40 ALUM PIPE | 0°-0° | 3 | 0 | 6.00 |
| FS08499 | B | 2 | 8" LW | 0°-0° | 1 | 5 1/2" | #### |
| FS-04739 | C | 2 | 6" H.W. | 0°-0° | | 9 1/2" | #### |
| FS-01990 | D | 4 | $\frac{1}{4}$" X 8" FLATPLATE | 0°-0° | | 2 1/4" | #### |
| FS-00678 | E | 4 | $\frac{1}{4}$" X6" FLATPLATE | 0°-0° | | 2 1/4" | #### |
| FS-04457 | F | 8 | $\frac{3}{8}$" X 2 $\frac{1}{4}$" FLATPLATE | L54°-L36° | | 10 7/8" | #### |

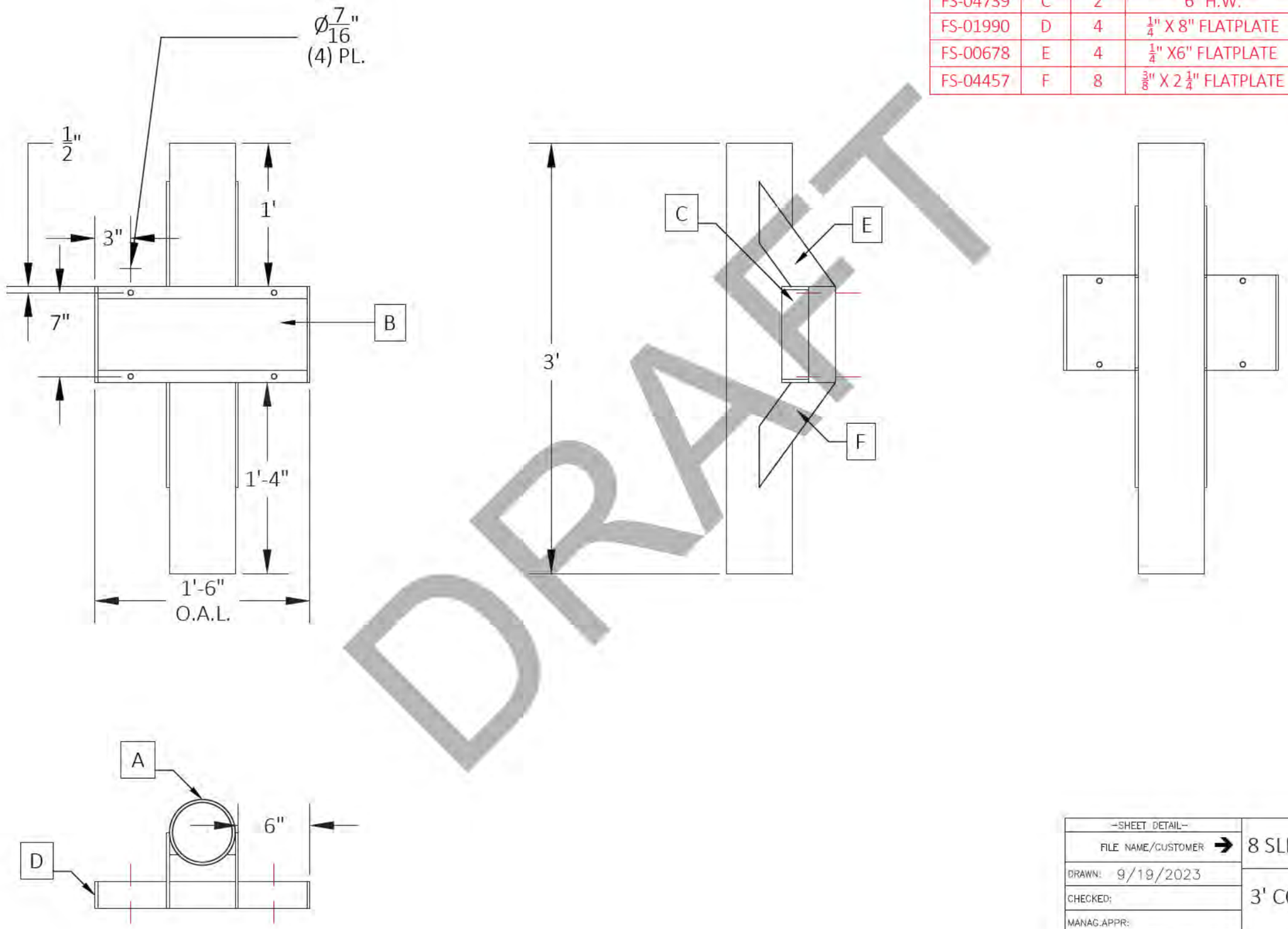


DRAFT

SP9–8

(2)REQUIRED

| –SHEET DETAIL– | | | | |
|---|---|---|---|---|
| FILE NAME/CUSTOMER → | 8 SLIP THE PENINSULA LOTS16-23.dwg | | | |
| DRAWN: 9/19/2023 | 3' COLLAR | | | |
| CHECKED: | | | | |
| MANAG.APPR: | | | | |
| ISSUED TO: MANUFACTURE | | | | |
| DESIGN DRAFTER: R.BAKER | SIZE B | SCALE 1:10 | DWG TYPE/NO. | REV 0 |
| FABRICATOR: | | | SHEET 24 OF 42 | |

AUTOCAD .DWG

| CUT/STOCK LIST | | | | | | | |
|---|---|---|---|---|---|---|---|
| DIE NUMBER | ITEM | QTY. | DESCRIPTION | DEGREE | FT. | IN. | TOTAL FT. |
| | A | 19 | 4" SCH 40 X 21' SPUD POLE | | 21 | 0 | 399.0000 |

1029

DRAFT

| -SHEET DETAIL- | | | | |
|---|---|---|---|---|
| FILE NAME/CUSTOMER → | 8 SLIP THE PENINSULA LOTS16-23.dwg | | | |
| DRAWN: 9/19/2023 | 21' POLES | | | |
| CHECKED: | | | | |
| MANAG.APPR: | | | | |
| ISSUED TO: MANUFACTURE | | | | |
| DESIGN DRAFTER: R.BAKER | SIZE B | SCALE 1:36 | DWG TYPE/NO. | REV 0 |
| FABRICATOR: | | | SHEET 25 OF 42 | |

AUTOCAD .DWG

## CUT/STOCK LIST

| DIE NUMBER | ITEM | QTY. | DESCRIPTION | DEGREE | FT. | IN. | TOTAL FT. |
|---|---|---|---|---|---|---|---|
| FH-01356 | A | 1 | 1/8" X 2" X 2" TUBE | 0°-0° | 9 | 8 7/8 | 9.739583 |
| FH-01356 | B | 2 | 1/8" X 2" X 2" TUBE | 0°-0° | 4 | 1 7/16 | 8.239583 |
| FH-01356 | C | 3 | 1/8" X 2" X 2" TUBE | 0°-0° | 4 | 3 | 12.750000 |
| FH-01356 | D | 2 | 1/8" X 2" X 2" TUBE | 45°-45° | 1 | 11 | 3.833333 |
| FH-01356 | E | 2 | 1/8" X 2" X 2" TUBE | 0°-45° | | 6 | 1.000000 |

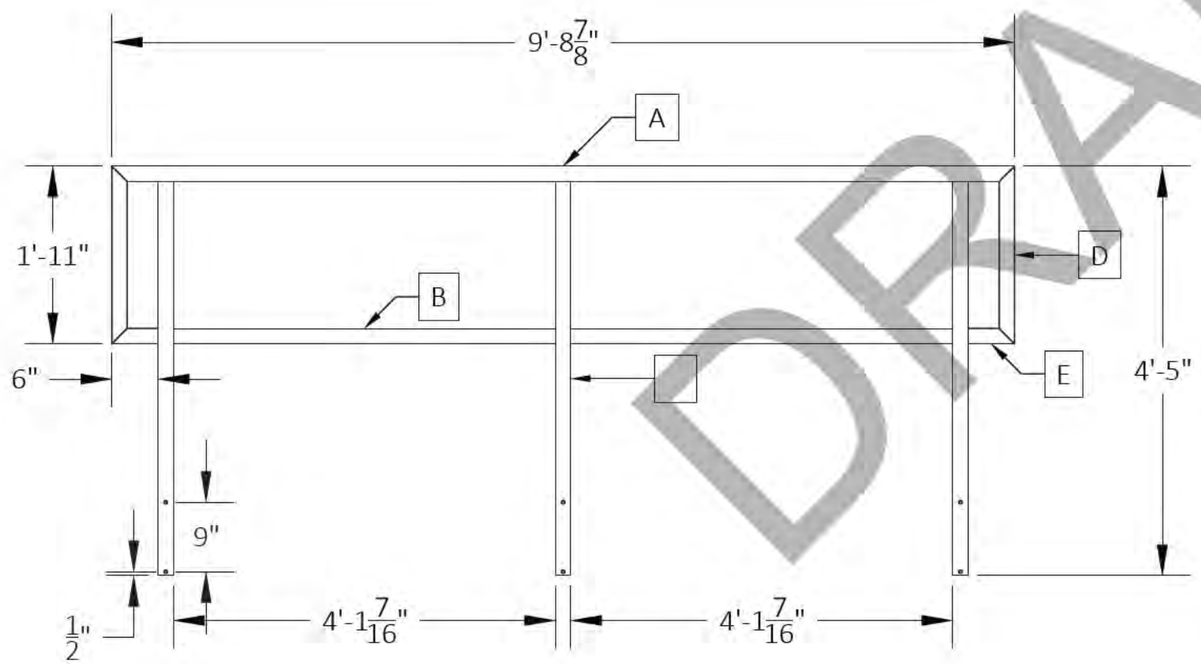


DRAFT

| | |
|---|---|
| -SHEET DETAIL- | |
| FILE NAME/CUSTOMER → | 8 SLIP THE PENINSULA LOTS16-23.dwg |
| DRAWN: 9/19/2023 | |
| CHECKED: | SR-1 |
| MANAG.APPR: | 6 (REQ) |
| ISSUED TO: MANUFACTURE | |
| DESIGN DRAFTER: R.BAKER | SIZE B · SCALE 1:20 · DWG TYPE/NO. · REV 0 |
| FABRICATOR: | SHEET 26 OF 42 |

AUTOCAD .DWG

## CUT/STOCK LIST

| DIE NUMBER | ITEM | QTY. | DESCRIPTION | DEGREE | FT. | IN. | TOTAL FT. |
|---|---|---|---|---|---|---|---|
| FH-01356 | A | 1 | 1/8" X 2" X 2" TUBE | 0°-0° | 7 | 4 7/16 | 7.369792 |
| FH-01356 | B | 1 | 1/8" X 2" X 2" TUBE | 0°-0° | 6 | 7/16 | 6.036458 |
| FH-01356 | C | 2 | 1/8" X 2" X 2" TUBE | 0°-0° | 4 | 3 | 8.500000 |
| FH-01356 | D | 2 | 1/8" X 2" X 2" TUBE | 45°-45° | 1 | 11 | 3.833333 |
| FH-01356 | E | 2 | 1/8" X 2" X 2" TUBE | 0°-45° | | 6 | 1.000000 |

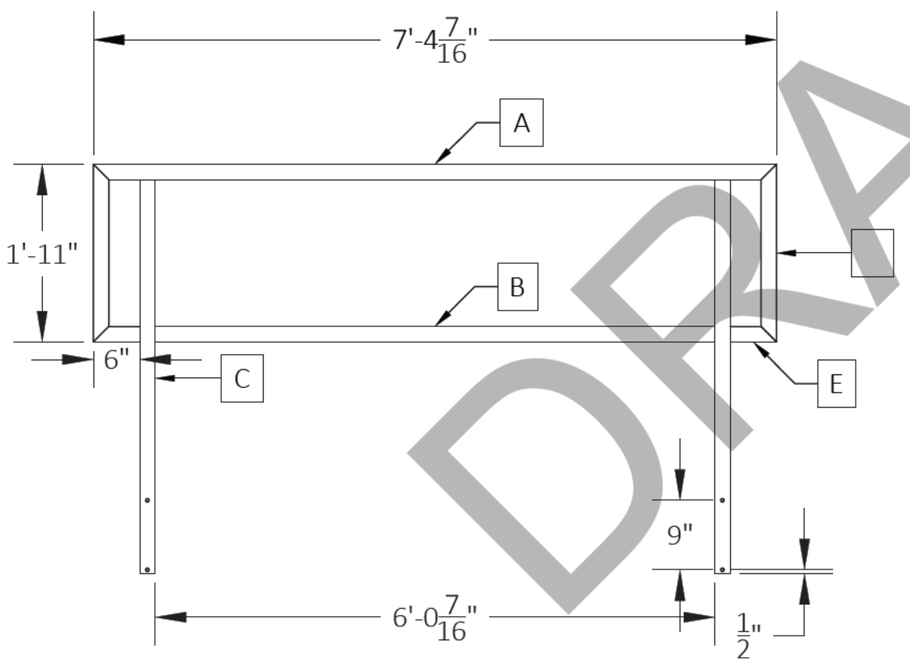


DRAFT

| | |
|---|---|
| –SHEET DETAIL– | |
| FILE NAME/CUSTOMER → | 8 SLIP THE PENINSULA LOTS16-23.dwg |
| DRAWN: 9/19/2023 | SR-2 |
| CHECKED: | 2 (REQ) |
| MANAG.APPR: | |
| ISSUED TO: MANUFACTURE | |
| DESIGN DRAFTER: R.BAKER | SIZE B · SCALE 1:20 · DWG TYPE/NO. · REV 0 |
| FABRICATOR: | SHEET 27 OF 42 |

AUTOCAD .DWG

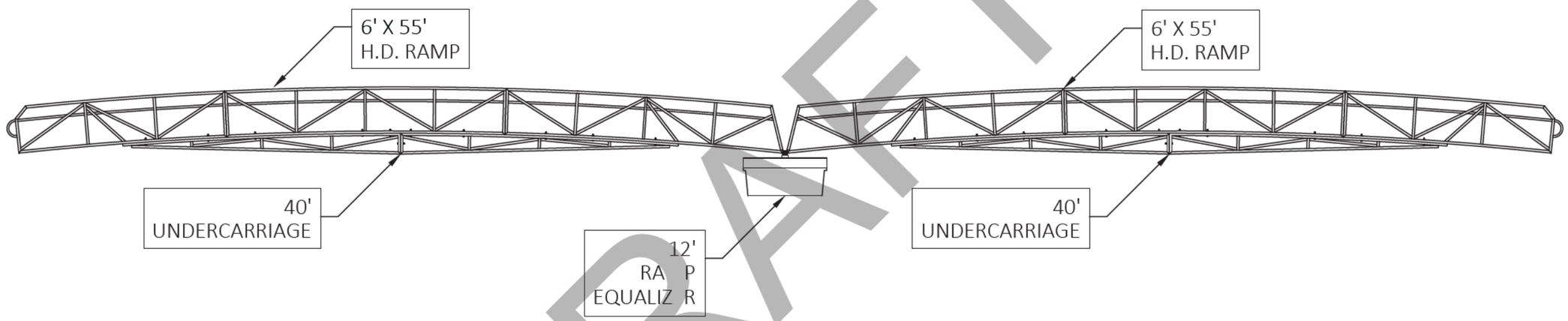


DRAFT

| | |
|---|---|
| –SHEET DETAIL– | |
| FILE NAME/CUSTOMER ➔ | 8 SLIP THE PENINSULA LOTS16-23.dwg |
| DRAWN: 9/19/2023 | (2) 6' X 55' RAMPS w/ EQUALIZER<br>SIDE VIEW |
| CHECKED: | |
| MANAG.APPR: | |
| ISSUED TO: MANUFACTURE | |
| DESIGN DRAFTER: R.BAKER | SIZE B · SCALE 1:100 · DWG TYPE/NO. · REV 0 |
| FABRICATOR: | SHEET 28 OF 42 |

AUTOCAD .DWG

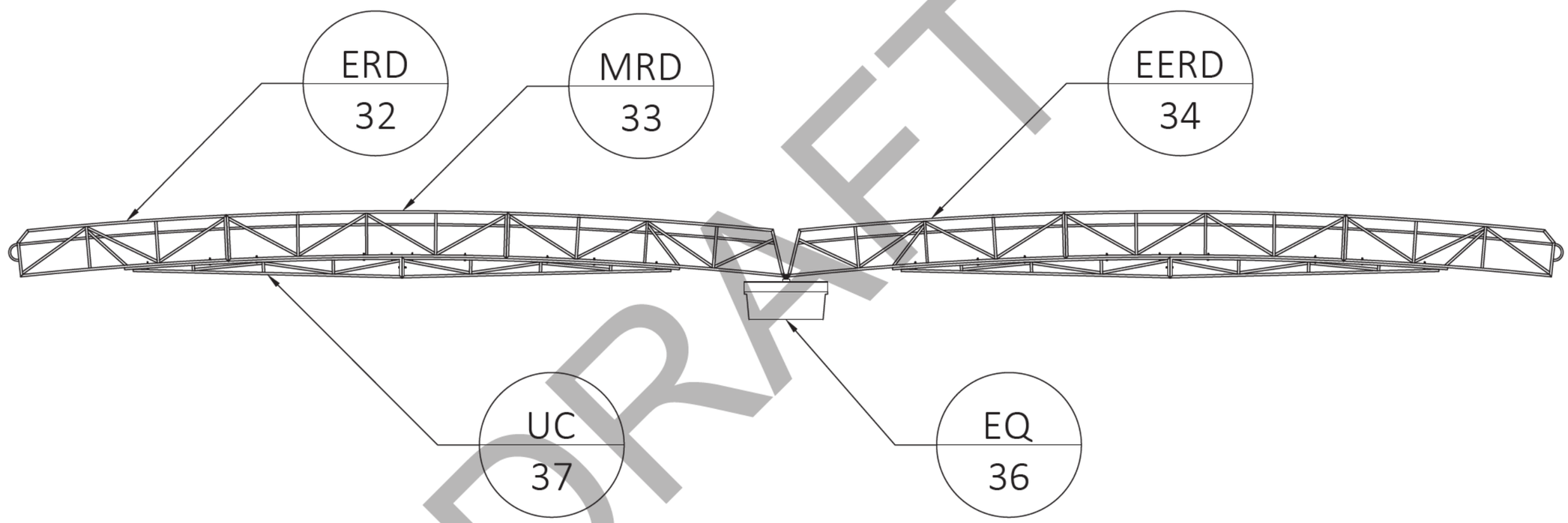


DRAFT

| | |
|---|---|
| –SHEET DETAIL– | |
| FILE NAME/CUSTOMER → | 8 SLIP THE PENINSULA LOTS16-23.dwg |
| DRAWN: 9/19/2023 | (2) 6' X 55' RAMPS w/ EQUALIZER SIDE VIEW |
| CHECKED: | |
| MANAG.APPR: | |
| ISSUED TO: MANUFACTURE | |
| DESIGN DRAFTER: R.BAKER | SIZE B · SCALE 1:100 · DWG TYPE/NO. · REV 0 |
| FABRICATOR: | SHEET 29 OF 42 |

AUTOCAD .DWG

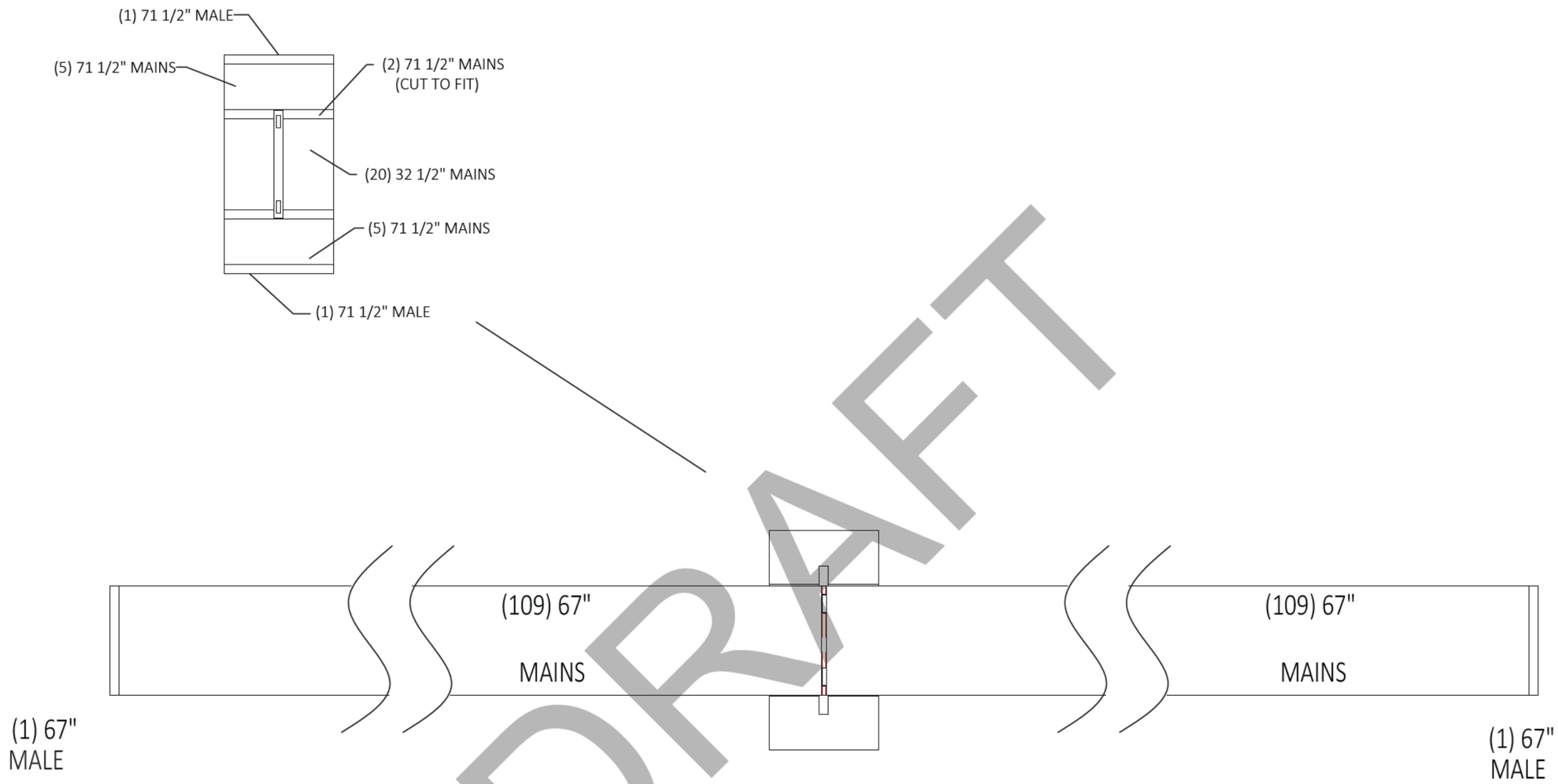


DRAFT

DECKING COLOR:

| -SHEET DETAIL- | | | | |
|---|---|---|---|---|
| FILE NAME/CUSTOMER → | 8 SLIP THE PENINSULA LOTS16-23.dwg | | | |
| DRAWN: 9/19/2023 | (2) 6' X 55' RAMPS w/ EQUALIZER DECKING DIAGRAM | | | |
| CHECKED: | | | | |
| MANAG.APPR: | | | | |
| ISSUED TO: MANUFACTURE | | | | |
| DESIGN DRAFTER: R.BAKER | SIZE B | SCALE 1:80 | DWG TYPE/NO. | REV 0 |
| FABRICATOR: | | | SHEET 30 OF 42 | |

AUTOCAD .DWG

| DECKING CUT LIST | | |
|---|---|---|
| QTY. | DESCRIPTION | COLOR |
| 218 | 67" MARINE MAINS | |
| 2 | 67" MARINE MALES | |
| | | |
| 12 | 71-1/2" MARINE MAINS | |
| 20 | 32 1/2" MARINE MAINS | |
| 2 | 71 $\frac{1}{2}$" MARINE MALES | |
| | | |
| | | |
| | | |
| | | |
| | | |
| | | |

DRAFT

| -SHEET DETAIL- | | | | |
|---|---|---|---|---|
| FILE NAME/CUSTOMER → | 8 SLIP THE PENINSULA LOTS16-23.dwg | | | |
| DRAWN: 9/19/2023 | (2) 6' X 55' RAMPS w/ EQUALIZER DECKING DIAGRAM | | | |
| CHECKED: | | | | |
| MANAG.APPR: | | | | |
| ISSUED TO: MANUFACTURE | | | | |
| DESIGN DRAFTER: R.BAKER | SIZE B | SCALE 1:80 | DWG TYPE/NO. | REV 0 |
| FABRICATOR: | | | SHEET 31 OF 42 | |

AUTOCAD .DWG

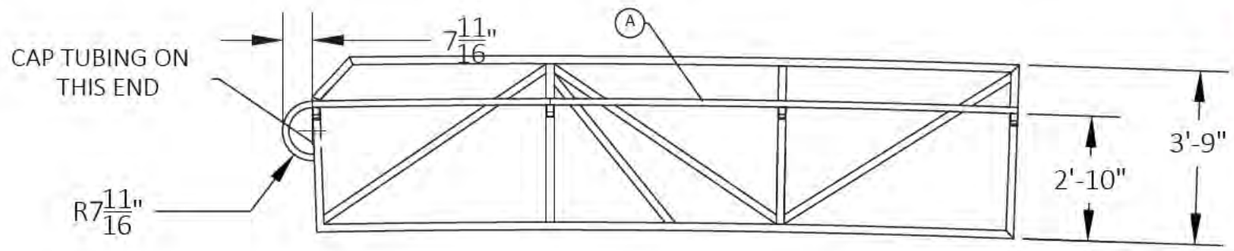


| STOCK LIST | | |
|---|---|---|
| DET. NO. | QTY. | DESCRIPTION |
| A | 2 | 1 1/4" SCH. 40 ALUM. PIPE 18' LG. **ROLLED ON ONE END** CUT TO FIT** |
| B | 8 | GRAB BAR BRACKETS 1 3/4" LG. |
| C | 2 | 1" X 2" TUBING 15'-2" LG. |

END RAMP SECTION

SEE ATTACHMENT
SHEET FOR THIS
END OF
THE RAMP

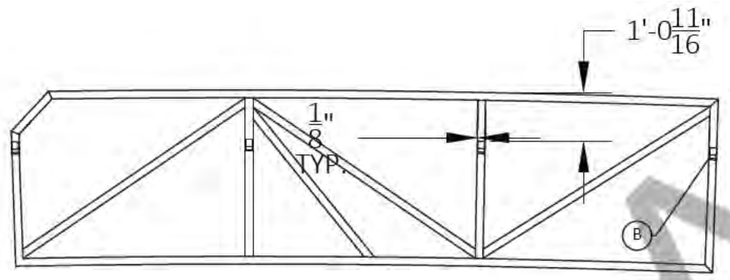


1'-0 11/16"
FROM THE TOP OF
THE RAMP TO THE
TOP OF THE GRAB RAIL
BRACKET

BOLT-UPS
ON THE THIS
END OF THE RAMP

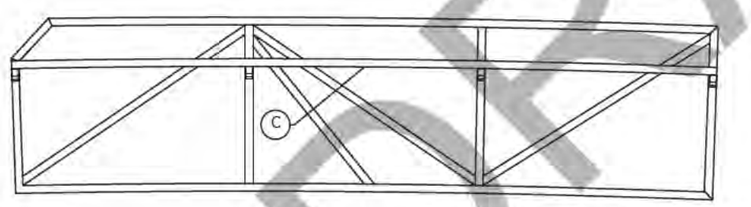


END RAMP SECTION

HANDRAILS ROLL INTO
END OF RAMP HANDLE

DECKING USED

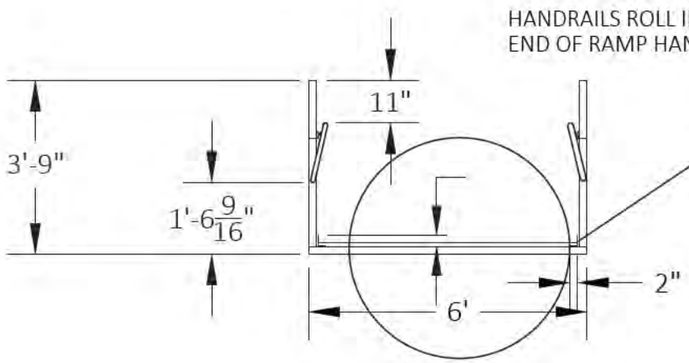


1/8"X2"X3"
ANGLE USED AS
TOE RAIL!
USE (1) 1/8"X 2"
FLATPLATE DOWN THE
CENTER OF THE RAMP

12 11/16"
FROM THE TOP OF
THE RAMP TO THE
TOP OF THE GRAB RAIL
BRACKET

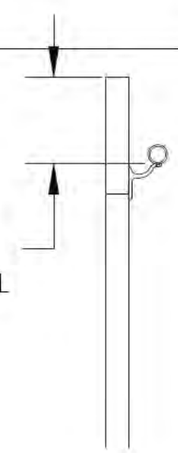

6 X 15' END
RAMP SECTION

DRAFT

| -SHEET DETAIL- | | | | |
|---|---|---|---|---|
| FILE NAME/CUSTOMER → | 8 SLIP THE PENINSULA LOTS16-23.dwg | | | |
| DRAWN: 9/19/2023 | | | | |
| CHECKED: | (2) 6' X 55' RAMPS w/ EQUALIZER ERD | | | |
| MANAG.APPR: | | | | |
| ISSUED TO: MANUFACTURE | | | | |
| DESIGN DRAFTER: R.BAKER | SIZE B | SCALE 1:40 | DWG TYPE/NO. | REV 0 |
| FABRICATOR: | | | | SHEET 32 OF 42 |

AUTOCAD .DWG

| STOCK LIST | | |
|---|---|---|
| DET. NO. | QTY. | DESCRIPTION |
| A | 2 | 1 1/4" SCH. 40 ALUM. PIPE 20' LG. CUT TO FIT** |
| B | 2 | 1 1/4" SCH. 40 ALUM PIPE 10'-1 5/16" LG. |
| C | 10 | GRAB BAR BRACKETS 1 3/4" LG. |

INSIDE VIEW

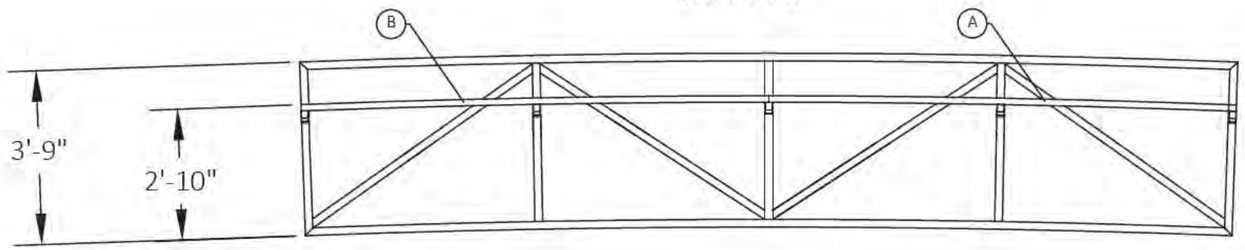


MIDDLE RAMP SECTION

BOLT-UPS
ON THE THIS
END OF THE RAMP

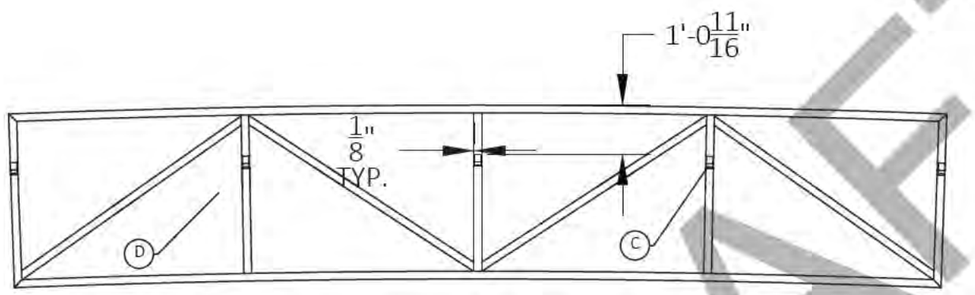


1'-0 11/16"
FROM THE TOP OF
THE RAMP TO THE
TOP OF THE GRAB RAIL
BRACKET

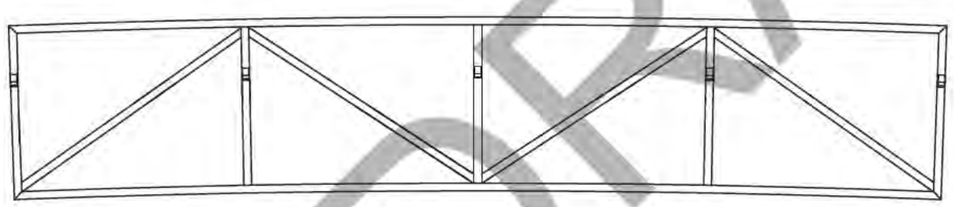

MIDDLE RAMP SECTION

HANDRAILS ROLL INTO
END OF RAMP HANDLE

67 DECKING USED

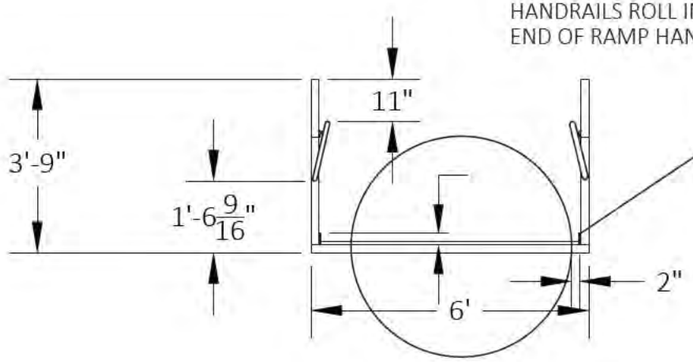


1/8"X2"X3
ANGLE USED AS
TOE RAIL!
USE (1) 1/8"X 2"
FLATPLATE DOWN THE
CENTER OF THE RAMP

12 11/16"
FROM THE TOP OF
THE RAMP TO THE
TOP OF THE GRAB RAIL
BRACKET

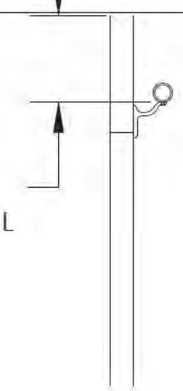

6' X 20' MIDDLE
RAMP SECTION

DRAFT

| -SHEET DETAIL- | | | | |
|---|---|---|---|---|
| FILE NAME/CUSTOMER → | 8 SLIP THE PENINSULA LOTS16-23.dwg | | | |
| DRAWN: 9/19/2023 | (2) 6' X 55' RAMPS w/ EQUALIZER MRD | | | |
| CHECKED: | | | | |
| MANAG.APPR: | | | | |
| ISSUED TO: MANUFACTURE | | | | |
| DESIGN DRAFTER: R.BAKER | SIZE B | SCALE 1:40 | DWG TYPE/NO. | REV 0 |
| FABRICATOR: | | | SHEET 33 OF 42 | |

AUTOCAD .DWG

| STOCK LIST | | |
|---|---|---|
| DET. NO. | QTY. | DESCRIPTION |
| A | 2 | 1 1/4" SCH. 40 ALUM. PIPE 13' LG. **ROLLED ON ONE END** CUT TO FIT** |
| B | 2 | 1 1/4" SCH. 40 ALUM PIPE 10'-1 5/16" LG. |
| C | 10 | GRAB BAR BRACKETS 1 3/4" LG. |

INSIDE VIEW

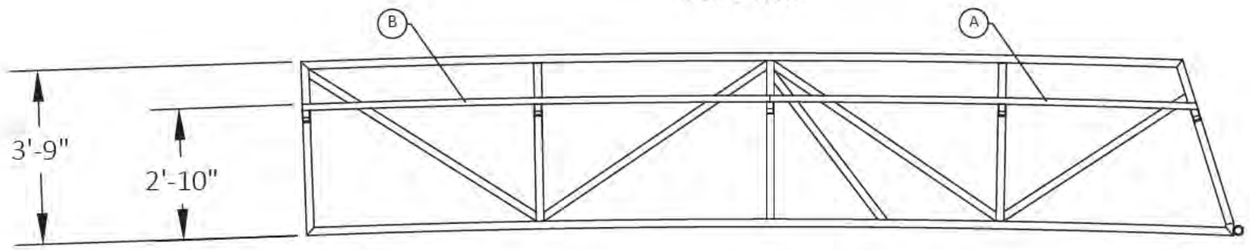


EQUALIZER END RAMP SECTION

BOLT-UPS
ON THE THIS
END OF THE RAMP

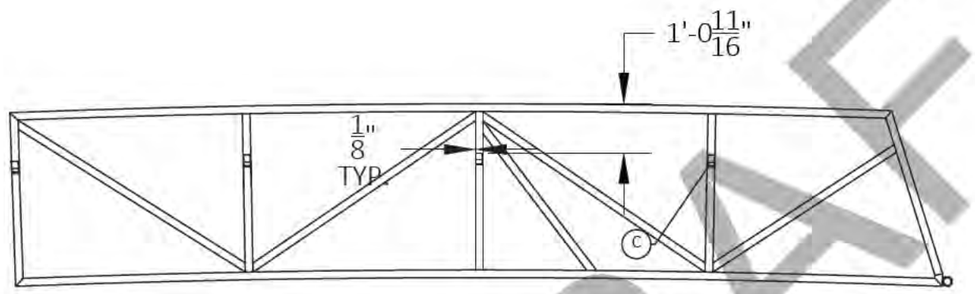


1'-0 11/16"
FROM THE TOP OF
THE RAMP TO THE
TOP OF THE GRAB RAIL
BRACKET

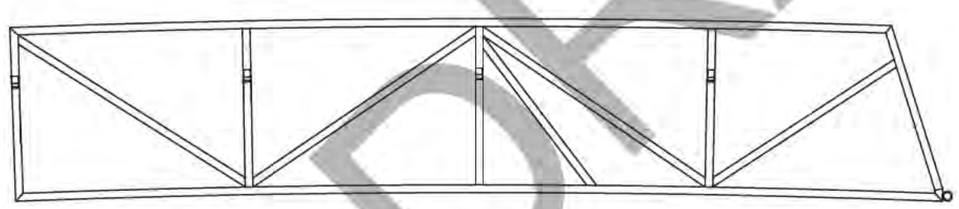

72" TRACK AND PIPE
ON THE THIS
END OF THE RAMP

EQUALIZER END RAMP SECTION

HANDRAILS ROLL INTO
END OF RAMP HANDLE

67" DECKING USED

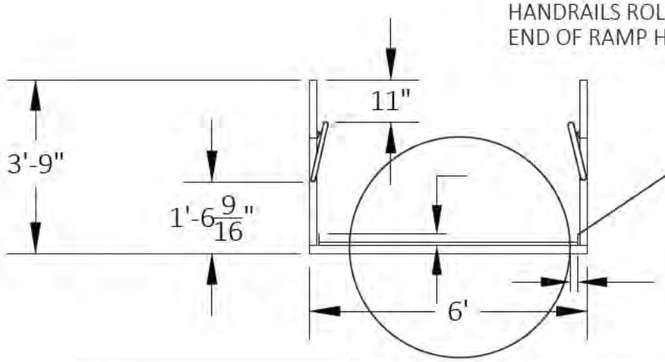


1/8"X2"X3"
ANGLE USED AS
TOE RAIL!
USE (1) 1/8"X 2"
FLATPLATE DOWN THE
CENTER OF THE RAMP

12 11/16"
FROM THE TOP OF
THE RAMP TO THE
TOP OF THE GRAB RAIL
BRACKET

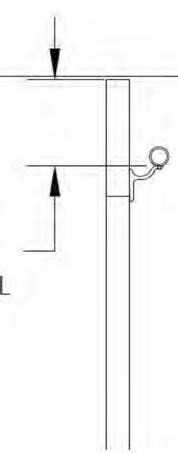

6' X 20' EQUALIZER END
RAMP SECTION

DRAFT

| -SHEET DETAIL- | | | | |
|---|---|---|---|---|
| FILE NAME/CUSTOMER → | 8 SLIP THE PENINSULA LOTS16-23.dwg | | | |
| DRAWN: 9/19/2023 | (2) 6' X 55' RAMPS w/ EQUALIZER EERD | | | |
| CHECKED: | | | | |
| MANAG.APPR: | | | | |
| ISSUED TO: MANUFACTURE | | | | |
| DESIGN DRAFTER: R.BAKER | SIZE B | SCALE 1:40 | DWG TYPE/NO. | REV 0 |
| FABRICATOR: | | | SHEET 34 OF 42 | |

AUTOCAD .DWG

| CUT LIST | | | | | | | |
|---|---|---|---|---|---|---|---|
| DIE NUMBER | ITEM | QTY. | DESCRIPTION | DEGREE | FT | IN | TOTAL FT |
| FH-07812 | A | 1 | RAMP PIPE | 0°-0° | 2 | 9 7/16" | #### |
| FS-07813 | B | 2 | RAMP TRACK | 0°-0° | 6 | 0" | 12.00 |
| FH-07812 | C | 2 | RAMP PIPE | 0°-0° | | 9 7/16" | #### |
| FH-07812 | D | 2 | RAMP PIPE | 0°-0° | | 9 11/16" | #### |

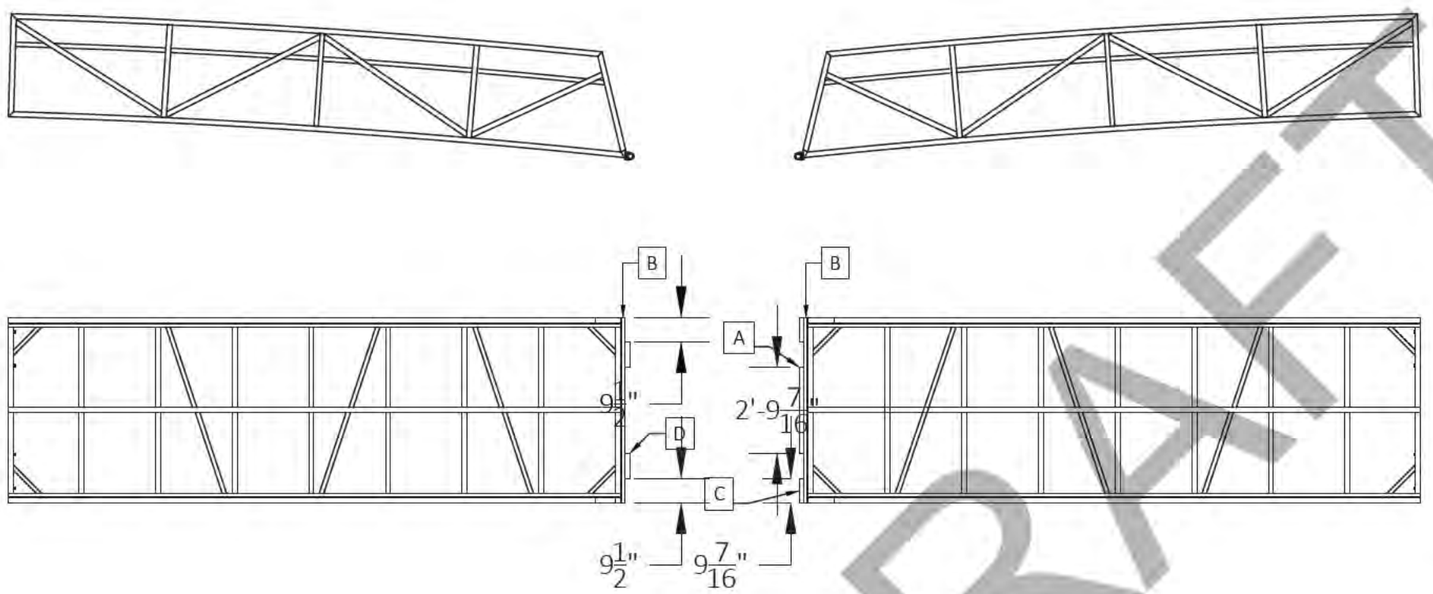


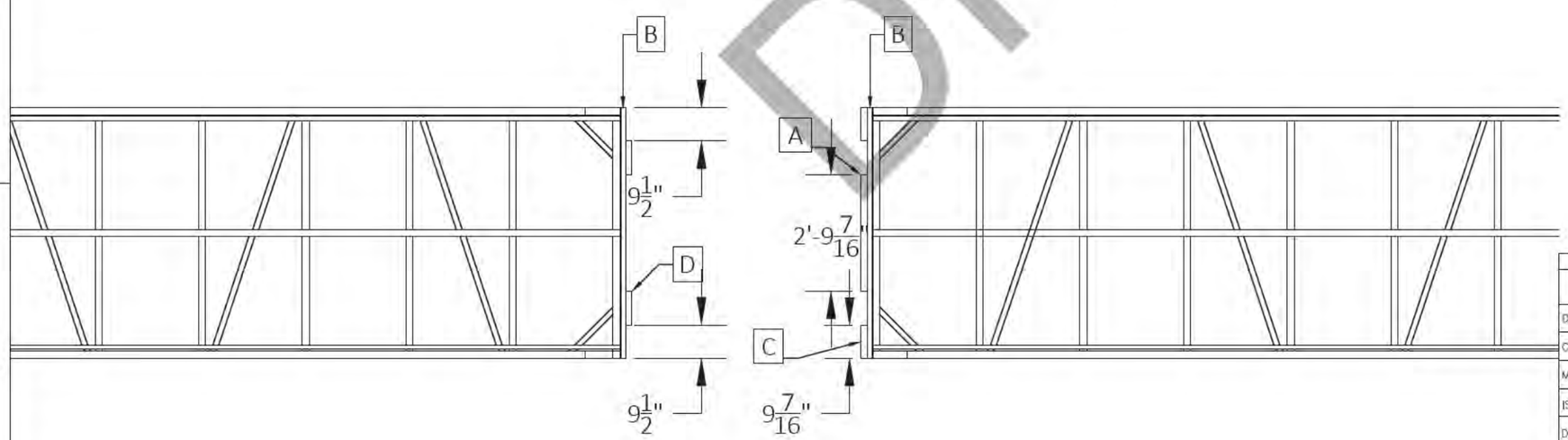


DRAFT

| | |
|---|---|
| –SHEET DETAIL– | |
| FILE NAME/CUSTOMER → | 8 SLIP THE PENINSULA LOTS16-23.dwg |
| DRAWN: 9/19/2023 | (2) 6' X 55' RAMPS w/ EQUALIZER |
| CHECKED: | EQ END RAMP ATTACHMENT |
| MANAG.APPR: | |
| ISSUED TO: MANUFACTURE | |
| DESIGN DRAFTER: R.BAKER | SIZE B · SCALE 1:60 · DWG TYPE/NO. · REV 0 |
| FABRICATOR: | SHEET 35 OF 42 |

AUTOCAD .DWG

| CUT LIST | | | | | | | |
|---|---|---|---|---|---|---|---|
| DIE NUMBER | ITEM | QTY. | DESCRIPTION | DEGREE | FT | IN | TOTAL FT |
| FS-00431 | A | 2 | 8" H.W. | 45°-45° | 12 | 0" | 24.00 |
| FS-00431 | B | 2 | 8" H.W. | 45°-45° | 6 | 0" | 12.00 |
| FS-00431 | C | 5 | 8" H.W. | 45°-45° | 5 | 7 1/2" | ##### |
| | D | 1 | 6" H.W. | 0°-0° | 8 | 5/8" | 8.05 |
| FS-00431 | E | 8 | 8" H.W. | 45°-45° | 1 | 2" | 9.33 |
| FH-07812 | F | 2 | RAMP PIPE | 0°-0° | | 8" | 1.33 |
| FS-00678 | G | 2 | 1/4" X 6" FLATPLATE | 0°-0° | | 2 1/4" | #### |
| FS-00431 | H | 2 | 8" H.W. | 0°-0° | 2 | 9 3/16" | #### |
| FS-07813 | I | 1 | RAMP TRACK | 0°-0° | 8 | 0 | 8.00 |

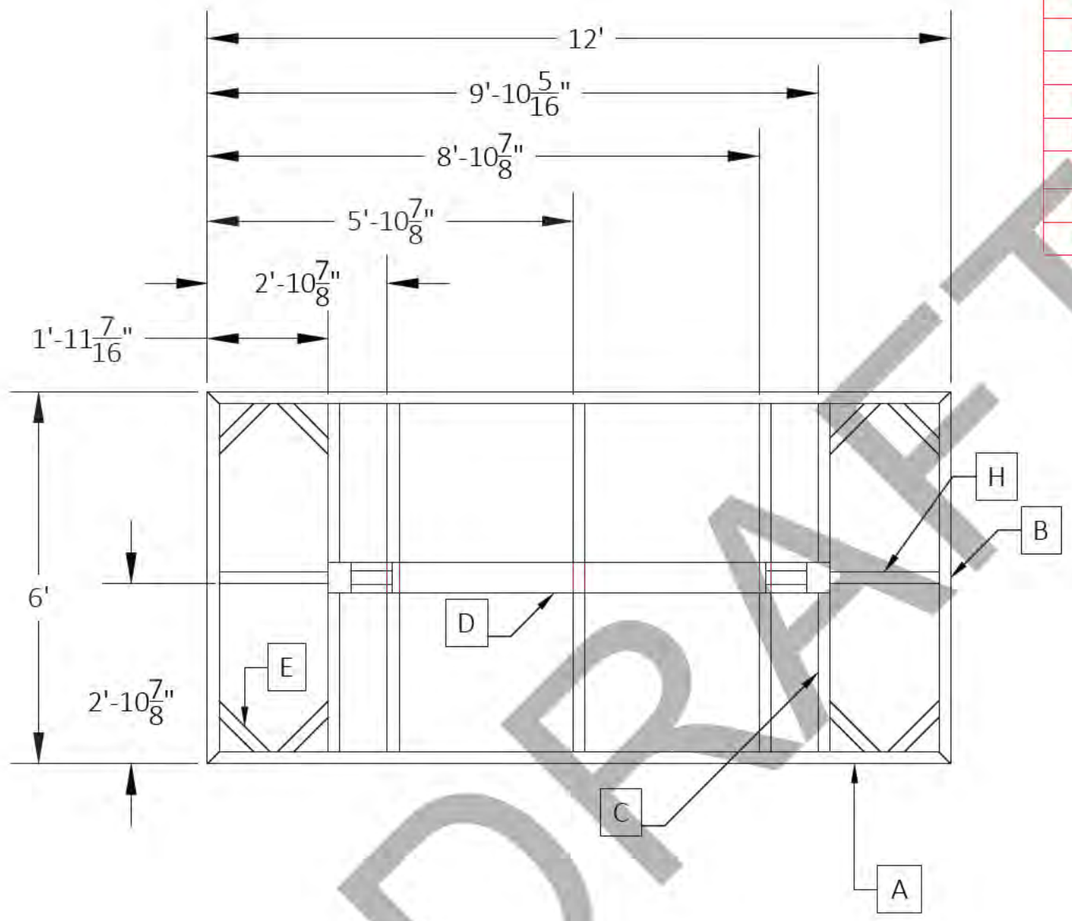


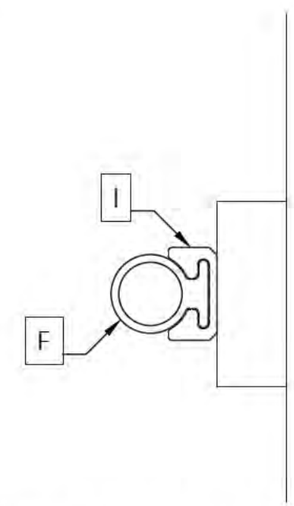


VIEW IN CIRCLE "B"

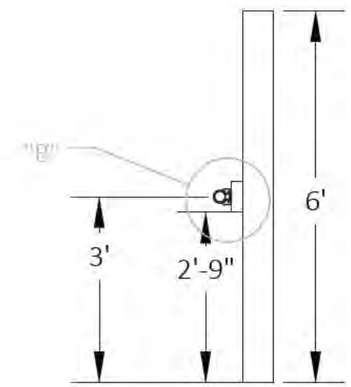


1074

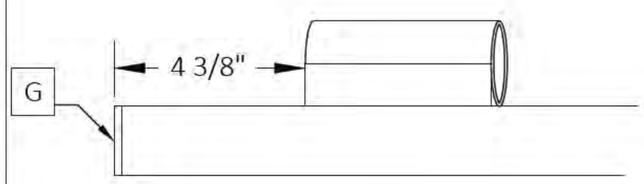


VIEW IN CIRCLE "A"

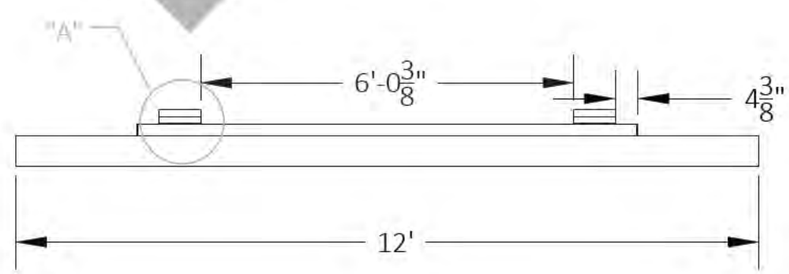


DRAFT

| | | | | |
|---|---|---|---|---|
| —SHEET DETAIL— | | | | |
| FILE NAME/CUSTOMER → | 8 SLIP THE PENINSULA LOTS16-23.dwg | | | |
| DRAWN: 9/19/2023 | (2) 6' X 55' RAMPS w/ EQUALIZER EQ | | | |
| CHECKED: | | | | |
| MANAG.APPR: | | | | |
| ISSUED TO: MANUFACTURE | | | | |
| DESIGN DRAFTER: R.BAKER | SIZE B | SCALE 1:30 | DWG TYPE/NO. | REV 0 |
| FABRICATOR: | | | SHEET 36 OF 42 | |

AUTOCAD .DWG

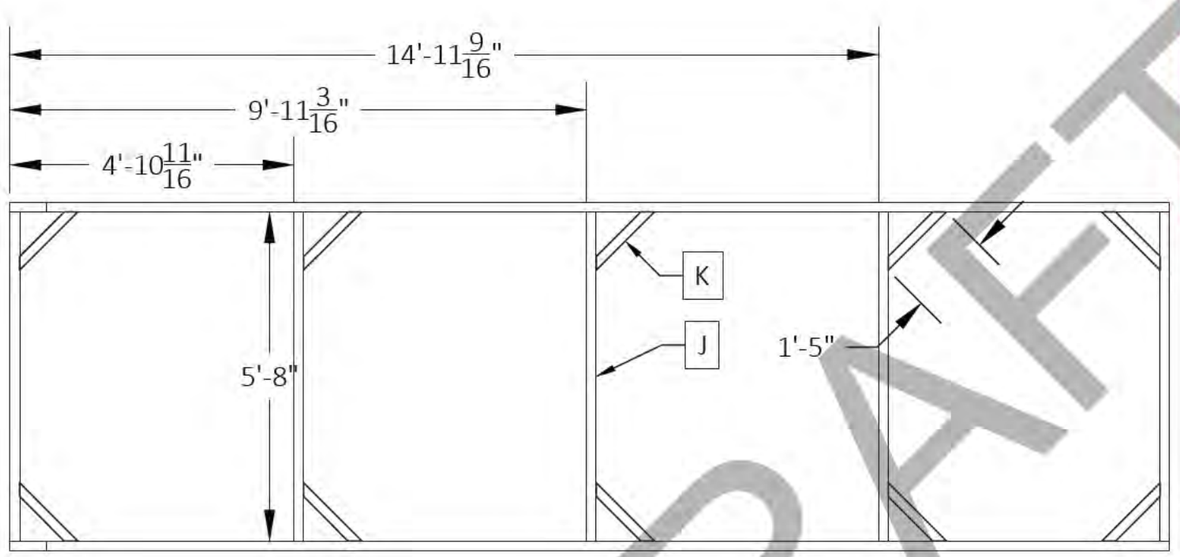


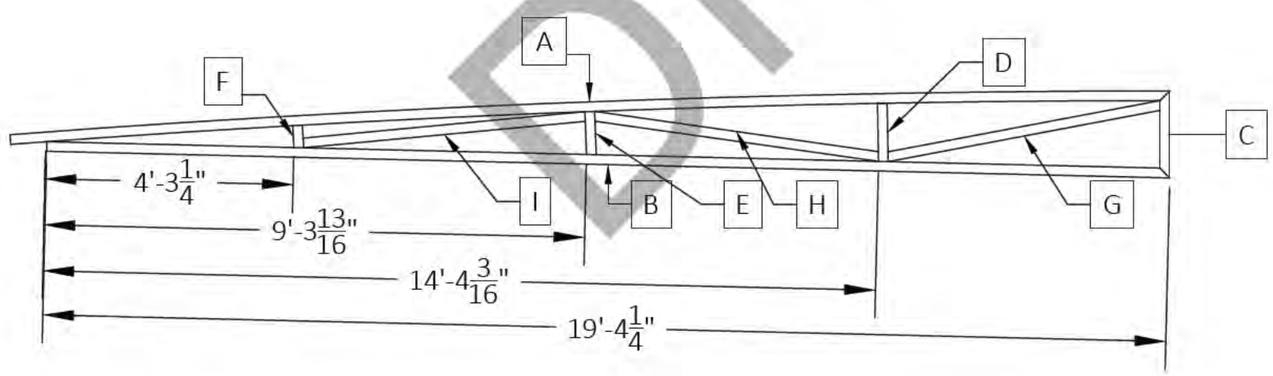


(4)REQUIRED

## CUT/STOCK LIST

| DIE NUMBER | ITEM | QTY. | DESCRIPTION | DEGREE | FT. | IN. | TOTAL FT. |
|---|---|---|---|---|---|---|---|
| FH-01356 | A | 2 | 1/8" X 2" X 2" TUBE | 45°-0° | 20 | 0" | 40.00 |
| FH-01356 | B | 2 | 1/8" X 2" X 2" TUBE | 45°-45° | 19 | 4 1/4" | ##### |
| FH-01356 | C | 2 | 1/8" X 2" X 2" TUBE | 45°-45° | 1 | 6" | 3.00 |
| FH-01356 | D | 2 | 1/8" X 2" X 2" TUBE | 0°-2° | 1 | 1/16" | 2.01 |
| FH-01356 | E | 2 | 1/8" X 2" X 2" TUBE | 0°-2° | | 8 15/16" | #### |
| FH-01356 | F | 2 | 1/8" X 2" X 2" TUBE | 0°-2° | | 4 11/16 | 0.78 |
| FH-01356 | G | 2 | 1/8" X 2" X 2" TUBE | 10°-11° | 4 | 8 7/8 | 9.48 |
| FH-01356 | H | 2 | 1/8" X 2" X 2" TUBE | 9°-10° | 4 | 11 1/4 | 9.88 |
| FH-01356 | I | 2 | 1/8" X 2" X 2" TUBE | 2°-3° | 4 | 10 1/2 | 9.75 |
| [illegible]01356 | J | 5 | 1/8" X 2" X 2" TUBE | 0°-0° | 5 | 8 | 28.33 |
| FH-0[illegible]56 | K | 10 | 1/8" X 2" X 2" TUBE | 0°-2° | 1 | 5 | 14.17 |

DRAFT

| | |
|---|---|
| —SHEET DETAIL— | |
| FILE NAME/CUSTOMER → | 8 SLIP THE PENINSULA LOTS16-23.dwg |
| DRAWN: 9/19/2023 | |
| CHECKED: | (2) 6' X 55' RAMPS w/ EQUALIZER UC |
| MANAG.APPR: | |
| ISSUED TO: MANUFACTURE | |
| DESIGN DRAFTER: R.BAKER | SIZE B · SCALE 1:32 · DWG TYPE/NO. · REV 0 |
| FABRICATOR: | SHEET 37 OF 42 |

AUTOCAD .DWG

| STOCK LIST | | |
|---|---|---|
| DET. NO. | QTY. | DESCRIPTION |
| A | 36 | 2 1/2" X 2 1/2" ANGLE 3'-6 7/16" LG. TO SH. 5'-5' |
| | 18 | BEING OPPOSITE HAND |
| B | 18 | 2 1/2" X 2 1/2" ANGLE 8" LG. |

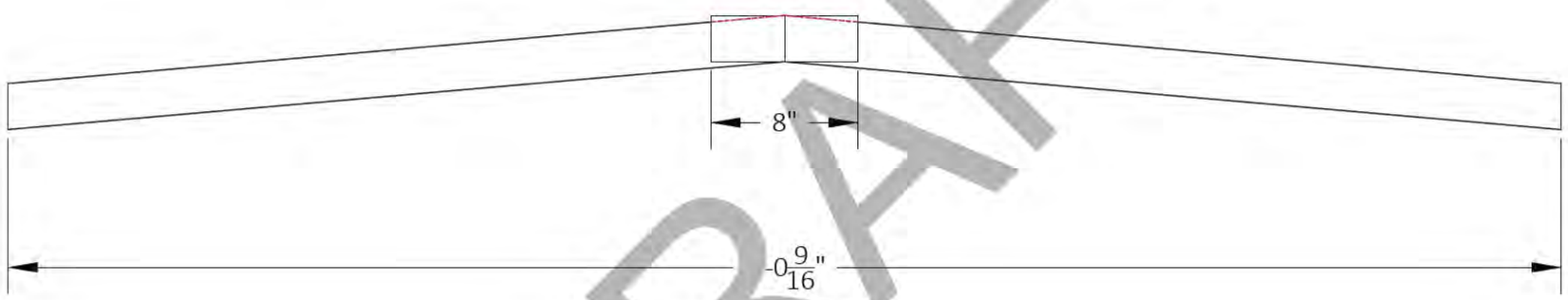


DRAFT

1068

(18) REQUIRED

| -SHEET DETAIL- | | | | |
|---|---|---|---|---|
| FILE NAME/CUSTOMER → | 8 SLIP THE PENINSULA LOTS16-23.dwg | | | |
| DRAWN: 9/19/2023 | 1068 | | | |
| CHECKED: | | | | |
| MANAG.APPR: | | | | |
| ISSUED TO: MANUFACTURE | | | | |
| DESIGN DRAFTER: K.BAKER | SIZE B | SCALE 1:8 | DWG TYPE/NO. | REV 0 |
| FABRICATOR: | | | SHEET 38 OF 42 | |

AUTOCAD .DWG

| STOCK LIST | | |
|---|---|---|
| DET. NO. | QTY. | DESCRIPTION |
| A | 2 | 1 7/16" ALUM. ROD 42" LG. |
| B | 2 | 2" OD UHMW TUBING 42" LG. |
| C | 4 | 1/4" ALUM. ROUND PLUG |
| D | 2 | 1 7/16" ALUM. ROD 44" LG. |
| E | 2 | 2" OD UHMW TUBING 44" LG. |

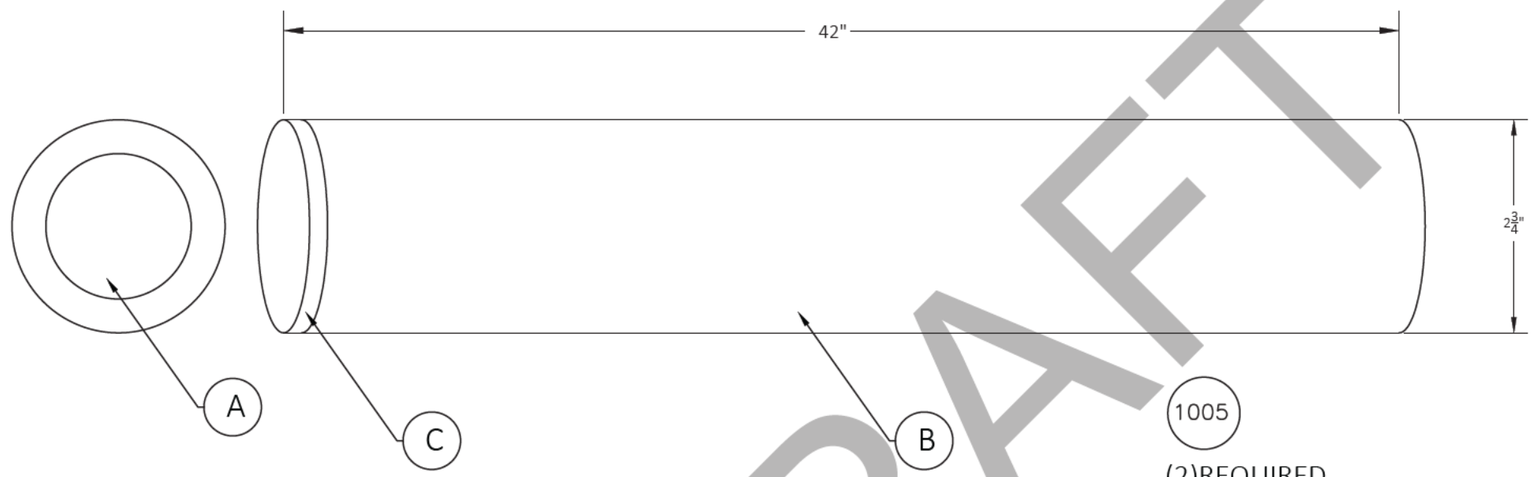


1005

(2)REQUIRED

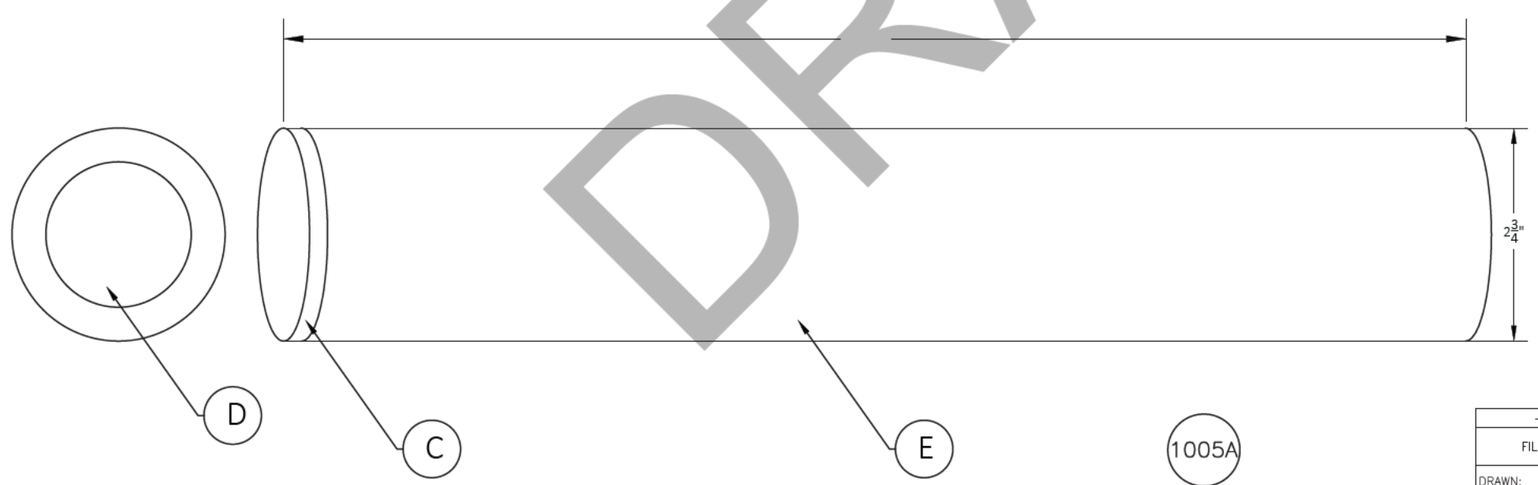


1005A

(2)REQUIRED

DRAFT

| —SHEET DETAIL— | | | | |
|---|---|---|---|---|
| FILE NAME/CUSTOMER → | 8 SLIP THE PENINSULA LOTS16-23.dwg | | | |
| DRAWN: 9/19/2023 | 1005 | | | |
| CHECKED: | | | | |
| MANAG.APPR: | | | | |
| ISSUED TO: MANUFACTURE | | | | |
| DESIGN DRAFTER: R.BAKER | SIZE B | SCALE 1:2 | DWG TYPE/NO. | REV 0 |
| FABRICATOR: | | | SHEET 39 OF 42 | |

AUTOCAD .DWG

NOTE:
THIS HARDWARE INCLUDED IN PACKAGE !

| STOCK LIST | | |
|---|---|---|
| DET. NO. | QTY. | DESCRIPTION |
| A | 2 | 3/16" X 3" X 3" ALUM. ANGLE 2'-11 1/2" LG. |
| B | 6 | 1/4" X 6" ALUM. PLATE 2" LG. |
| C | 2 | BLACK VERTICAL "NO LIP" BUMPERS |

DRAFT

CENTER BUMPER TO THE ANG E!!

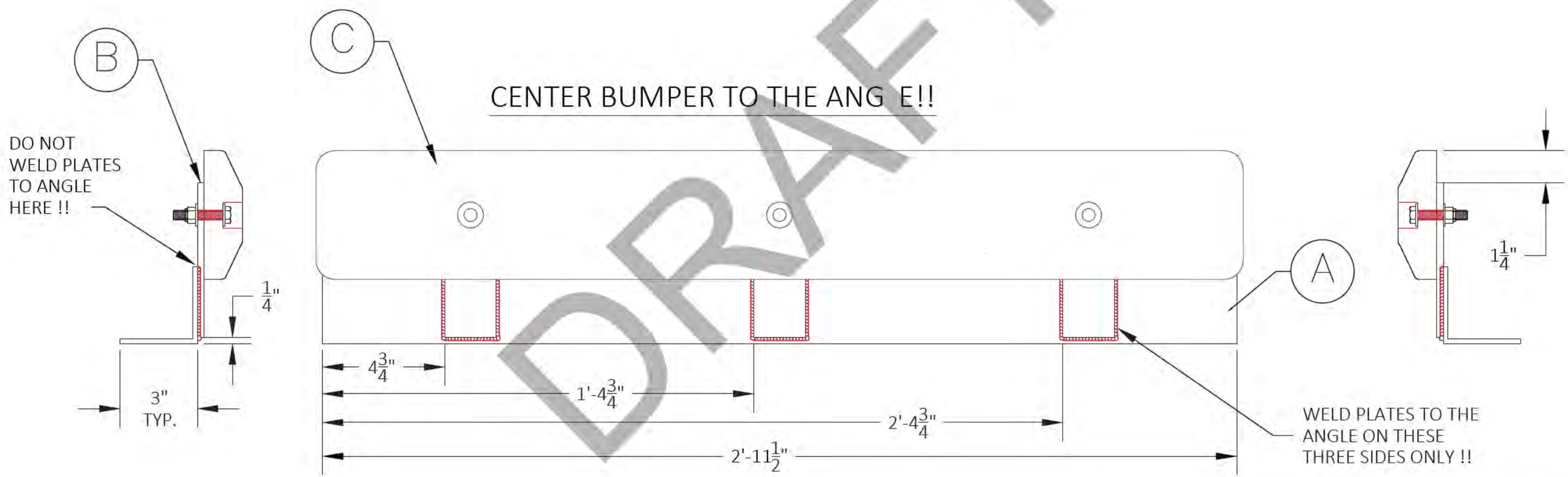


1033

| —SHEET DETAIL— | | | | |
|---|---|---|---|---|
| FILE NAME/CUSTOMER → | 8 SLIP THE PENINSULA LOTS16-23.dwg | | | |
| DRAWN: 9/19/2023 | 1005 | | | |
| CHECKED: | | | | |
| MANAG.APPR: | | | | |
| ISSUED TO: MANUFACTURE | | | | |
| DESIGN DRAFTER: R.BAKER | SIZE B | SCALE 1:4 | DWG TYPE/NO. | REV 0 |
| FABRICATOR: | | | SHEET 40 OF 42 | |

AUTOCAD .DWG

| ➔ ACCESSORIES ← | | | |
|---|---|---|---|
| QTY. | DESCRIPTION | PC | COLOR |
| 45 | HORIZONTAL BUMPER | | |
| 20 | CORNER BUMPER | | |
| 40 | SUPER CUSHION | | |
| 2 | DIAGONAL CABLES (RAMP) | | |
| 108 | POST TRIM (2pc. - # of post) | | |
| 1 | ROLLER GUIDE ASSEMBLY | | |
| 35 | FLOAT PLUGS | | |
| 38 | CLEATS | | |
| 33 | 20' STAIR NOSING (stick) | | |
| 2 | RAMP WEIGHT LIMIT TAG | | |
| 19 | 4" PVC CAPS | | |
| 19 | SPUD POLE **SILENCERS** | | |
| 19 | 4" GALVANIZED SPUD POLES | | |
| 2 | DECKING TOUCH-UP | | |

DRAFT

| | | | | |
|---|---|---|---|---|
| —SHEET DETAIL— | | | | |
| FILE NAME/CUSTOMER ➔ | 8 SLIP THE PENINSULA LOTS16-23.dwg | | | |
| DRAWN: 9/19/2023 | ACCESSORIES | | | |
| CHECKED: | | | | |
| MANAG.APPR: | | | | |
| ISSUED TO: MANUFACTURE | | | | |
| DESIGN DRAFTER: R.BAKER | SIZE B | SCALE 1:20 | DWG TYPE/NO. | REV 0 |
| FABRICATOR: | | | SHEET 41 OF 42 | |

AUTOCAD .DWG

## LOAD LIST

| ITEM # | QTY | DESCRIPTION | COLOR |
|---|---|---|---|
| | | **FLOATS** | |
| | 17 | 3X6X16 | |
| | 18 | 3X6X20 | |
| | | | |
| | | **FRAMES** | |
| BW627.5 | 2 | 6 X 27.5 BACKWALK | |
| BW626 | 2 | 6 X 26 BACKWALK | |
| F324 | 9 | 3 X 24 FINGER | |
| | | | |
| | | **DECKING (LOCKDRY AND MARINE)** | |
| | 438 | 35-1/2" LOCKDRY MAINS | |
| | 200 | 5' 11-1/2" LOCKDRY MAINS | |
| | | | |
| | 9 | 35-1/2" LOCKDRY STARTER | |
| | 1 | 5' 11-1/2" LOCKDRY STARTER | |
| | | | |
| | 9 | 35-1/2" LOCKDRY FINISHER | |
| | 1 | 5' 11-1/2" LOCKDRY FINISHER | |

## LOAD LIST

| ITEM # | QTY. | DESRIPTION | FT. | IN. | COLOR |
|---|---|---|---|---|---|
| | | **POST AND BRACES** | | | |
| A | 36 | 4" POST | 10 | 2 | |
| B | 18 | 4" POST | 10 | 8-1/16 | |
| C | 18 | 4" POST | 11 | 2-3/16 | |
| D | 18 | 4" POST | 11 | 2 3/8 | |
| E | 18 | 4" POST | 10 | 8 1/4 | |
| | 34 | 4" STUB UP | 7 | 4 | |
| | | | | | |
| SP1 | 6 | SPLIT HAND RAIL | 9 | $8\frac{7}{8}$ | |
| SP2 | 2 | SPLIT HAND RAIL | 7 | $4\frac{7}{16}$ | |
| | | | | | |
| | | ANCHORING | | | |
| K-SP1 | 17 | 8' SPUD POLE COLLARS | | | |
| SP9-8 | 2 | 3' SPUD POLE COLLARS | | | |
| | 19 | 21' SPUD POLES | | | |
| | | | | | |
| | | **ROOF COMPONENTS** | | | |
| F | 9 | 2" X 2" ANG E | 6 | $5\frac{1}{2}$ | |
| G | 9 | 2" X 2 ANGLE | 6 | $5\frac{1}{8}$ | |
| H | 9 | 2" X 2" ANGLE | 6 | $\frac{1}{16}$ | |
| I | 9 | 2" X " ANG E | 6 | $3\frac{5}{16}$ | |
| J | 18 | 2" X 2" A GLE | 4 | $5\frac{1}{4}$ | |
| K | 3 | 2 2" ANG | 5 | $2\frac{7}{16}$ | |
| L | 9 | 2" X 2 ANGLE | 29 | $7\frac{1}{8}$ | |
| N | 1 | Z B AM | 30 | | |
| O | 16 | Z EAM | 29 | | |

## RAMP LOAD LIST

| QTY. | DESCRIPTION | BANK ATTACHMENT | WATER ATTACHMENT | COLOR |
|---|---|---|---|---|
| | **RAMP** | | | |
| 2 | 6' X 55' | ROLLERS | DOCK | |
| 1 | 6' X 12" EQUALIZER | | | |
| | | | | |
| 218 | 67" MARINE MAINS | | | |
| 2 | 67" MARINE MALES | | | |
| | | | | |
| 12 | 71-1/2" MARINE MAINS | | | |
| 20 | 32 1/2" MARINE MAINS | | | |
| 2 | $71\frac{1}{2}$" MARINE MALES | | | |
| | | | | |

DRAFT

| –SHEET DETAIL– | |
|---|---|
| FILE NAME/CUSTOMER → | 8 SLIP THE PENINSULA LOTS16-23.dwg |
| DRAWN: 9/19/2023 | LOAD LIST |
| CHECKED: | |
| MANAG.APPR: | |
| ISSUED TO: MANUFACTURE | |
| DESIGN DRAFTER: R.BAKER | SIZE B · SCALE 1:36 · DWG TYPE/NO. · REV 0 |
| FABRICATOR: | SHEET 42 OF 42 |

AUTOCAD .DWG

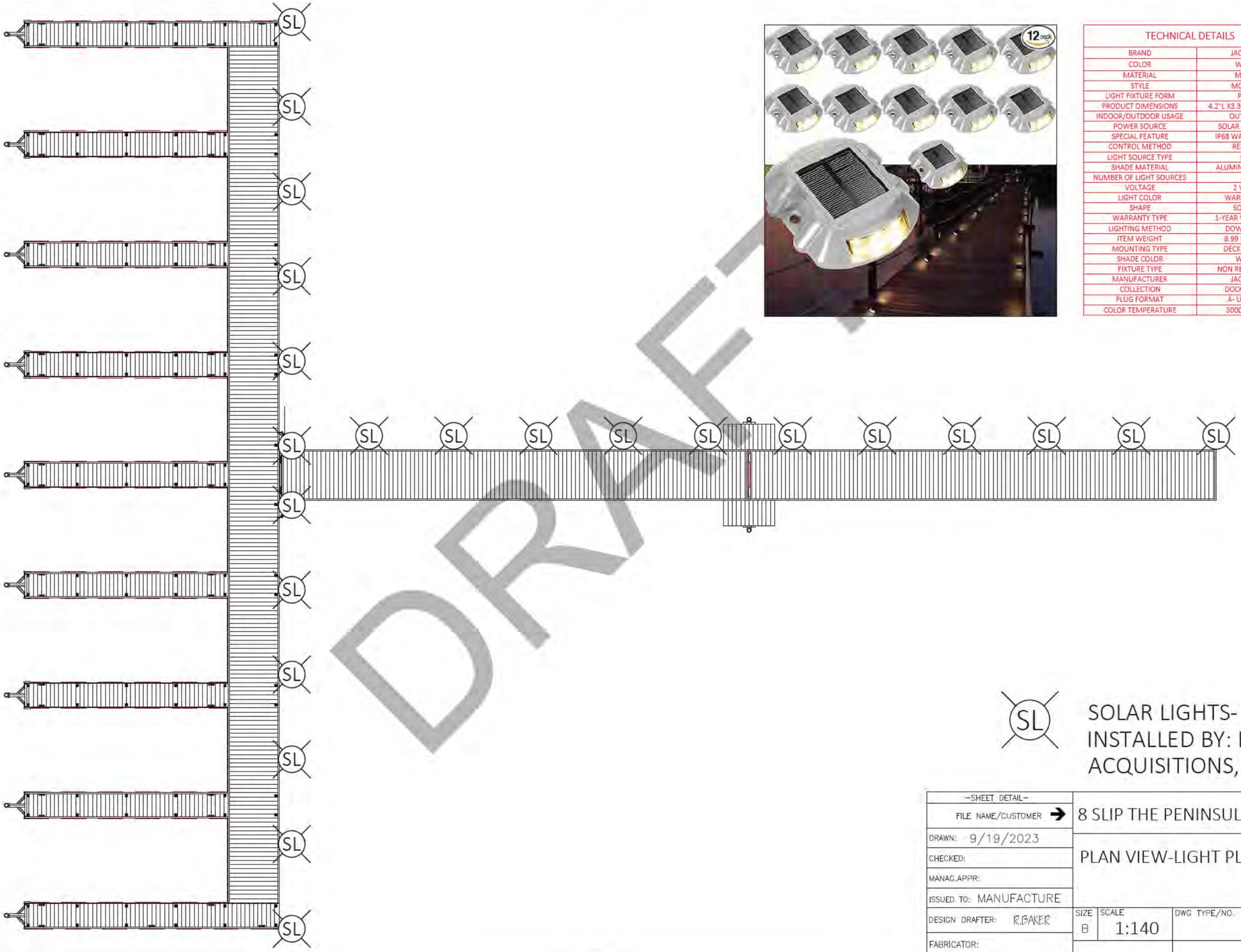





| TECHNICAL DETAILS | |
|---|---|
| BRAND | JACKYLED |
| COLOR | WARM |
| MATERIAL | METAL |
| STYLE | MODERN |
| LIGHT FIXTURE FORM | PATH |
| PRODUCT DIMENSIONS | 4.2"L X3.37"W X 0.94"H |
| INDOOR/OUTDOOR USAGE | OUTDOOR |
| POWER SOURCE | SOLAR POWERED |
| SPECIAL FEATURE | IP68 WATERPROOF |
| CONTROL METHOD | REMOTE |
| LIGHT SOURCE TYPE | LED |
| SHADE MATERIAL | ALUMINUM ALLOY |
| NUMBER OF LIGHT SOURCES | 6 |
| VOLTAGE | 2 VOLTS |
| LIGHT COLOR | WARM LIGHT |
| SHAPE | SQUARE |
| WARRANTY TYPE | 1-YEAR WARRANTY |
| LIGHTING METHOD | DOWNLIGHT |
| ITEM WEIGHT | 8.99 POUNDS |
| MOUNTING TYPE | DECK MOUNT |
| SHADE COLOR | WHITE |
| FIXTURE TYPE | NON REMOVABLE |
| MANUFACTURER | JACKYLED |
| COLLECTION | DOCK LIGHTS |
| PLUG FORMAT | -A- US STYLE |
| COLOR TEMPERATURE | 3000 KELVIN |

DRAFT

SL — SOLAR LIGHTS- SUPPLIED AND INSTALLED BY: BD ACQUISITIONS, LLC.

| -SHEET DETAIL- | | | | |
|---|---|---|---|---|
| FILE NAME/CUSTOMER → | 8 SLIP THE PENINSULA LOTS16-23.dwg | | | |
| DRAWN: 9/19/2023 | PLAN VIEW-LIGHT PLACEMENT | | | |
| CHECKED: | | | | |
| MANAG.APPR: | | | | |
| ISSUED TO: MANUFACTURE | | | | |
| DESIGN DRAFTER: R.BAKER | SIZE B | SCALE 1:140 | DWG TYPE/NO. | REV 0 |
| FABRICATOR: | | | SHEET 5 OF 42 | |

# EXHIBIT B

Shoreline Lease and Use Agreement

DRAFT

**SHORELINE LEASE AND USE AGREEMENT**
**BETWEEN NORTH TEXAS MUNICIPAL WATER DISTRICT and**
**THE PENINSULA & SHORES POA**

This Shoreline Lease and Use Agreement (the "Agreement") is between North Texas Municipal Water District ("NTMWD" or "District"), a wholesale water and wastewater provider that owns and operates Bois d'Arc Lake (the "Lake") in Fannin County, Texas, and BD Acquisitions, LLC. ("Developer") and The Peninsula & Shores POA (the "Association"), which serves The Peninsula and The Shores at the Peninsula (Developer and Association may collectively be referred to as "Lessee"). NTMWD and Lessee may also be referred to individually as a "Party" or collectively as the "Parties."

## Recitals

WHEREAS, NTMWD and Lessee are authorized to enter into th Agreement pursuant to Chapter 62, Acts of the 52nd Legislature, 1951 (Article 8280-141, Vernon s Texas Civil Statutes) and other applicable laws;

WHEREAS, NTMWD operates Bois d'Arc Lak ( he "Lake") as a public drinking water supply reservoir and allows opportunities for public recreat n on the Lake;

WHEREAS, Developer owns land ad acent t NTMWD-owned property at the Lake (the "Property") that is subject to the Peninsula and the Shores a the Peninsula covenants, conditions, and restrictions that are included h as Exhi X;

WHEREAS, Lessee s eks to le se and u the adjacent NTMWD-owned property (the "Leased Property") and main in imp ve on the Leased Property, including structures and facilities on or over the water sur e of the Lake (the "Improvements") constructed by Developer pursuant to that cert n Prel inary evelopment Agreement between the North Texas Municipal Water District and BD Acqui tions, LC. effective September ___, 2024 (the "Development Agreement");

WHEREAS, e Assoc ation is the legal entity presiding over all shared Improvements within The Peninsula & h Shores At the Peninsula communities and no other agreements will be allowed for shared Improvements on the Leased Property that were not part of the Development Agreement;

WHEREAS, Lessee acknowledges there is a Permanent Flowage and Flood Easement (the "Easement") associated with Property, on land located between the 541 feet mean sea level ("MSL") and 545 MSL contour elevations;

WHEREAS, Lessee is aware the conditions of the Easement are permanently in effect and are separate from the requirements and conditions of this Agreement and the Shoreline Management Plan ("SMP");

WHEREAS, this Agreement may authorize certain uses of the Easement, in addition to uses of the Leased Property, which shall not be inconsistent with conditions of the Easement, but

DRAFT

may impose further restrictions on the Easement, for which Lessee agrees to comply with, in accordance with the terms of this Agreement;

WHEREAS, Developer completed construction of the Improvements on _____, 202_ (the "Project"); and

WHEREAS, pursuant to the Development Agreement, Lessee is required to enter into this Agreement, has reviewed this Agreement, and accepts its terms and conditions, including the general and special conditions described herein.

NOW THEREFORE, in consideration of the mutual covenants and agreements herein contained, NTMWD agrees to grant Lessee the right to lease and use the Leased Property, and Lessee agrees to pay for such lease and use, upon the terms and conditi ns and for the consideration hereinafter set forth, to wit:

**Lessee Information**

Name: BD Acquisitions, LLC.

Telephone, Area Code, and Number: 912-223-4390

Email: logue@llcinvest.com

Address: 9827 Cogdill Rd. Suite #1

City, State Zip Code: Knoxville N 3 932

**Legal Description of Boundary L ne with Leased Property (Survey attached)**

**XXXXXX, an add ion to F nnin C unty, Texas according to the map and plat therof recorded at XXXXXXX Offic l Map and Plat Records of Fannin County, Texas**

**Improvements Descrip on (Specific structures and facilities) including a Site Plan**

**Use Description (Specific use and activities authorized)**

The following specific uses and activities are hereby authorized so long as such uses and activities are in compliance with the General Conditions of this Agreement and the SMP. Any uses or activities not authorized, such as a Special Event Authorization, must be separately authorized by NTMWD.

DRAFT

## GENERAL CONDITIONS

1. **REFERENCES.** Except as otherwise specifically provided, any reference herein to NTMWD shall include its duly authorized representatives. Any reference to "Lessee" shall include their duly authorized representatives.

2. **AGREEMENT FEES.** Lessee shall pay, in advance, to NTMWD, compensation in accordance with Exhibit X. Fees are subject to change upon renewal of the Agreement.

3. **AGREEMENT SCOPE.** This Agreement is entered into solely with Lessee for the purpose described in this Agreement. The exercise of the privileges herein granted shall be:
    a. without cost or expense to NTMWD;
    b. subject to the right of NTMWD to improve, use, o aintain the Leased Property;
    c. subject to other outgrants of NTMWD on the L ased P operty except as otherwise provided herein;
    d. this Agreement, or any interest therein, m y not be transferr d or assigned without the prior express written approval of N MWD.

4. **TERM.** This Agreement shall be for a term of f (5) years with Lessee having the sole option to extend the Agreement fo subsequent ve-year terms subject to NTMWD revising the terms and conditions of he Ag eement at e time of each renewal with such revisions being consistent with revisions made o her shoreline lease and use agreements, including but not limited to a current o updated fee/fine schedule. At least ninety (90) days prior to expiration of the A reemen and any renewal thereof, Lessee may provide a Notice to Surrender its ights un er the Ag eement and elect to not renew the Agreement.

5. **RELEASE.** Upon the m letion of Improvements as set forth herein and the transfer of Improvements t he Asso ation, Developer may assign its rights and obligations under this Agreement to th Asso ation and be released from Developer's obligations and surrende any and all rig ts Developer may have under this Agreement to the Association with the pr r express wr ten approval of NTMWD.

6. **NOTICE.** Unle oth rwise provided herein, any notice, communication, request, reply or advice (herein sever lly and collectively, for convenience, called "Notice") herein provided or permitted to be given, made or accepted by any Party to any other Party must be in writing and may be given or be served by depositing the same in the United States mail postpaid and registered or certified and addressed to the Party to be notified, with return receipt requested, or by delivering the same to an officer of such Party, or by electronic mail, addressed to the Party to be notified at the email address provided below. Notice deposited in the mail in the manner described above shall be conclusively deemed to be effective, unless otherwise stated herein, from and after the expiration of three (3) days after it is so deposited. Notice given in any other manner shall be effective only if and when received by the Party to be notified. For the purposes of notice, the contact information of the Parties shall, until changed as hereinafter provided, be as follows:

DRAFT

If to Developer
or Association:

If to NTMWD, to: Jennafer P. Covington
Executive Director/General Manager
North Texas Municipal Water District
P.O. Box 2408
Wylie, Texas 75098
972-442-5405
jcovington@ntmwd.com

The Parties hereto shall have the right from time to time and at any time to change their respective contact information and each shall have the ght to specify as its contact information any other contact information by at least ifteen 15) days' written notice to the other Party hereto.

7. **OPERATION, MAINTENANCE REPAIR, & REPLACEMENT.** The operation, maintenance, repair, or replacement of Impro ments authorized by this Agreement shall be performed at no cost or expense to NTMWD a d subject to the express written approval of NTMWD. Anything not expressly uthorized in w iting by NTMWD as an Improvement activity or an approved deviation from an Improveme t activity is expressly prohibited. Upon the completion of any of such op ration m tenance, repair or replacement, Lessee shall immediately restore the Leased Pr per y to the satisfaction of NTMWD. The use and occupation of the Leased Prop rty for he purposes herein granted shall be subject to NTMWD's property ownership ights, th policies as set forth in the SMP, and to all applicable federal, st e, and lo al l ws and regulations. If Improvements are removed for storage or extensive mai tenance, NTMWD may require portions of the Improvements be removed from th Leased roperty. Further, Lessee agrees to operate and maintain any Improveme ts and/or e in a anner so as to provide safety, minimize any adverse impact on fish a d wildlife hab at, natural, environmental, or cultural resource values and in a manner so s to minimiz the degradation of water quality.

8. **COMMUNITY FACILITY USE AND ACCESS.** NTMWD is not responsible for managing or maint ining access to, or use of, any Lessee community facilities located on the Leased Property. Lessee has sole responsibility of operation and maintenance of all Lessee community facilities located on the Leased Property. Lessee further has sole responsibility for interacting with individual property owners of the Association regarding access to, and use of, the Leased Property (including community facilities), and shall be solely responsible for ensuring property owners do not violate any terms of this Agreement. Any violation of this Agreement by an individual property owner shall be deemed a violation of this Agreement by Lessee and Lessee will be responsible for paying fines imposed by NTMWD due to violations by individual property owners, unless and excepting any improvements made by individual property owners after obtaining an individual Shoreline Lease and Use Agreement from NTMWD. Association shall continue to enforce covenants and restrictions, but individual lessees shall be solely responsible for

DRAFT

paying any fines imposed by NTMWD pursuant to the individual's Shoreline Lease and Use Agreement.

9. **LESSEE INSPECTION.** Lessee acknowledges it shall inspect the Improvements at reasonable intervals and immediately repair any defects found by such inspection or when required by NTMWD to repair any such defects.

10. **LESSEE'S REPRESENTATIONS.** Lessee represents that it will not be in violation of any regulations or restrictions imposed by Fannin County, Texas, or by any deed restrictions that may be attached to the Property, and that any required variance has been secured. Lessee further agrees to fully enforce the covenants, conditions, and restrictions of Association, as included in Exhibit X and as amended from time to time, against individual property owners of the Association. NTMWD assumes no responsibility for, and Lessee will hold NTMWD harmless from, disputes of title, rights, or liability for damages to persons or property arising from the construction, operation, maintenance, repair, or existence of any Improvements on the Leased Property. If at any time, the condition or presence of the Improvements interferes with the operation of the Lake or the safety of persons or property using the surface thereof, Lessee agrees to immediately make any and all changes or corrections necessary to make the Improvements comply with this Agreement or remove the Improvements from the Leased Property at Lessee's expense.

11. **RELEASE & ASSUMPTION OF RISK.** Lessee acknowledges that Bois d'Arc Lake is not a "constant level" or "controlled level" lake and is **SUBJECT TO DROUGHT OR FLOODING WITHOUT WARNING.** Lessee acknowledges and agrees that the Leased Property is accepted "**AS-IS, WHERE-IS**" with all defects, whether known or unknown. Lessee recognizes the risk inherent in owning, operating, and maintaining Improvements in close proximity to, and over, the Lake because of the risks associated with flooding, high water, and drought conditions. These risks include, but are not limited to, lake level fluctuation resulting in Improvements, such as docks, being completely unusable during flood or drought conditions, which can extend over months or years, as it relates to multi-year drought conditions. As a condition of, and in consideration for, NTMWD's entering into this Agreement, as between NTMWD and Lessee, Lessee **AGREES TO ASSUME ALL RISK** of destruction of or damage to any Improvements and the property of Lessee or third parties located on the Property, Leased Property or Easement and to assume all risk of bodily injury or death to any person on the Property, Leased Property or Easement associated with the Improvements resulting from any cause. As part of the assumption of risk, Lessee, for itself and its heirs and assigns, **EXPRESSLY RELEASES NTMWD FROM ALL LOSS, COSTS, AND LIABILITY FOR (1) DAMAGE OR DESTRUCTION TO ANY OF ITS PROPERTY LOCATED ON OR AT THE PROPERTY, LEASED PROPERTY OR EASEMENT RESULTING FROM ANY CAUSE AND (2) BODILY INJURY OR DEATH TO LESSEE OR ANY FAMILY MEMBER OR OTHER PERSON AT THE PROPERTY, LEASED PROPERTY OR EASEMENT.**

DRAFT

12. **INDEMNIFICATION.** NTMWD shall have no liability whatsoever, either to Lessee, Lessee's successors, assigns, guest invitees or any other third party, for property damage to Lessee's Improvements or the contents thereof, **EVEN IF CAUSED BY NTMWD'S NEGLIGENCE**. NTMWD shall not be liable to Lessee or Lessee's guests, visitors, invitees or to any other person whomsoever, for any injury to person or damage to property on or about the Property, Leased Property or Easement due to **ANY CAUSE WHATSOEVER, INCLUDING WITHOUT LIMITATION, INUNDATION OR FLOODING OF THE PROPERTY, LEASED PROPERTY OR EASEMENT OR THE EFFECTS OF DROUGHT**, and Lessee agrees to indemnify NTMWD and hold it harmless from any loss, expenses, or claims including attorney's fees, arising out of any such damage or injury, **INCLUDING INJURY TO PERSON OR DAMAGE TO PROPERTY THE SOLE OR CONTRIBUTING CAUSE OF WHICH IS THE NEGLIGENCE OF NTMWD**. If any action or proceedin is brought against NTMWD by reason of any such claim, Lessee, upon notice from NTMWD, will defend such action or proceeding with counsel acceptable to NTMWD.

13. **WAIVER OF ANY TAKINGS CLAIM.** Les ee **WAIVES ANY CLAIM IT MAY NOW OR IN THE FUTURE HAVE AGAINST NTMWD FOR A STATE OR FEDERAL "TAKINGS" or "INVERSE CONDEMNATION"** of either the Property or the Improvements or the portion of the Lease Property or Easement on which the Improvements are located resulting from Lake leve s being inconstant or from flooding, high water, drought, or similar occur ence, ven if any f these occurrences are caused or alleged to be caused, in whole or in part, by TMWD, whether through NTMWD's negligence or otherwise.

14. **NO GOODS OR SERVICES PROVI ED TO NTMWD.** The Parties agree that pursuant to this Agre ment Le e is not providing any "good or services" to NTMWD and this Agreement is n t contract subject to Chapter 271, Subchapter I of the Texas Local Govern t Code ecause no "goods or services," as such terms have been interpreted y courts the S te of Texas, are provided by Lessee to NTMWD pursuant to this A eement.

15. **DAMAGE TO LEASE PROPERTY.** Lessee shall be liable for any and all damage that may be caused the Leased Property by the activities of Lessee, or individual property owners of Lessee, nder this Agreement and shall exercise due diligence in the protection of all property located on the Leased Property against fire or damage from any and all other causes. Any property of NTMWD damaged or destroyed by Lessee, or individual property owners of Lessee, incident to the exercise of the privileges herein granted shall be promptly repaired or replaced by Lessee to a condition satisfactory to NTMWD, or at the election of NTMWD, reimbursement made therefore by Lessee in an amount necessary to restore or replace the property to a condition satisfactory to NTMWD.

16. **NTMWD'S ACCESS TO LEASED PROPERTY.** The right is reserved to NTMWD, its officers, agents, and employees to enter upon the Leased Property at any time and for any purpose necessary or convenient in connection with NTMWD work, to make inspections, to remove any material, except property of Lessee approved for use on the Leased Property,

DRAFT

and/or to make any other use of the lands as may be necessary in connection with NTMWD purposes, and Lessee shall have no claim for damages on account thereof against NTMWD or any officer, agent, or employee thereof. NTMWD's authorized representative shall be allowed to cross Lessee's property, excluding sold individual lots as shown on the recorded Plats unless such access is authorized by separate agreement, as necessary, to inspect Improvements. NTMWD will notify Lessee of any deficiencies noted and will establish a schedule for their correction. No deviation or changes from approved plans for Improvements will be allowed without prior written approval of NTMWD. Any deviations from the Improvements require prior written approval by NTMWD after Lessee submits a request to NTMWD for a deviation in writing. NTMWD has thirty (30) days to review and respond to the request from Lessee. Notwithstanding the foregoing, if NTMWD determines during an inspection that a noncompliance issue concerns a significant imminent threat to the environment or public health, safety, and general welfare, NTMWD may take whatever action necessary within the authority f NTMWD to eliminate such threat, including but not limited to, requiring Le see to immediately address the noncompliance issue.

17. **COMPLIANCE WITH APPLICABLE LAWS AND REGULATIONS.** This Agreement is subject to all applicable federal nd sta e laws and any applicable permits, ordinances, rules, orders, and regulations of an local, state or federal governmental authority having or asserting jurisdiction, including but not limited to, the provisions of the latest edition of the National Ele trica Code (NE Nothing contained herein shall be construed as a waiver of any right to questi n ontest any such law, ordinance, order, rule, or regulation in any forum, having ju sdiction. This Agreement does not authorize any injury to private prop rty o invasio of private rights or any infringement of local, state or federal laws o regulati ns, nor d es it obviate the necessity of obtaining local, state, or federal assen required y l w for the operation, use, maintenance, or repair of the Improvement and/or use

18. **RULES AND REGU ATIONS.** The Leased Property shall be expressly subject to all rules and egulations promulgated by NTMWD for the construction, use, maintenance, and enjoyment of the Lease Property, including without limitation, all regulations and requirements f NTMWD, now or hereafter enacted. By signing this Agreement, Lessee specifically ackn wle ges that it has read the applicable requirements of the Bois d'Arc Lake Rules and Regulations, the SMP, and Fannin County Zoning Regulations and agrees that Lessee's use of the Leased Property shall at all times be in compliance with such plans and regulations.

19. **COMPLIANCE WITH OTHER AGREEMENTS.** Lessee shall remain in compliance with all other agreements between Lessee and NTMWD including, but not limited to, compliance with other agreements related to shoreline activities and applicable Flowage and Flood Easements. Non-compliance with any other NTMWD agreement, contract, lease, or easement shall be considered non-compliance with this Agreement.

20. **EROSION CONTROL STRUCTURES.** Lessee shall maintain, in a manner satisfactory to NTMWD, all soil and water conservation structures that may be in existence upon the

DRAFT

Leased Property at the beginning of this Agreement, and Lessee shall take appropriate measures to prevent or control soil erosion within the right-of-way herein granted. Lessee agrees to allow any adjacent landowner that holds a lease with NTMWD to connect to shoreline erosion control structures constructed by Lessee in order to facilitate contiguous shoreline erosion control between adjacent leased properties, including maintenance thereof. Any soil erosion occurring outside the Leased Property resulting from the use of the Leased Property shall be corrected by Lessee as directed by NTMWD.

21. **BOAT DOCK FACILITY USE.** Boat dock facilities shall be limited to the mooring of Lessee's, or Lessee's individual property owner's, vessels or watercrafts and the storage of equipment essential to the operation of such vessels or watercrafts. Equipment must be stored in enclosed storage box facilities, such as lockers or equipment closets. Equipment may not be left unsecured or unattended. Chemical and pet ochemical products shall not be stored on a boat dock facility at any time and shall not considered "equipment."

22. **COMMERCIAL ACTIVITIES PROHIBITED.** No attempt sh ll be made by Lessee to forbid the full and free use by the public of all waters adjacent to t Improvements. No charge may be made for use by others, excepti g the assessments to cover non-commercial costs such as property lease payments, insuran e, upk ep and maintenance to lot owners, of the Improvement nor shall commercial activiti including any form of advertising, be conducted thereon.

23. **HABITATION PROHIBITED.** No abitati n authorized on the Leased Property or the Easement. No Improvements, cam ing equipment, temporary structures, recreation vehicles, nor any moored esse shall be sed as a place of habitation or as a full or part-time residence or in an manner hat give the appearance of human habitation, including habitation of any pets on the L s d Property or the Easement. Household furnishings are not permitted on boat do ks r other structures.

24. **TRANSFER OF IN ERES** Improvements authorized under this Agreement will not be rente whether shor term or long-term, directly or indirectly, or through an internet-based company like Airb b, Inc.), sub-let or provided to others by any means of engaging in commerci activitie by Lessee or his/her agent for monetary gain. This does not preclude Lessee om elling total ownership of the Improvements or sub-letting boat slips to lot owners to sha e in the cost of lease and maintenance of the shared dock. If ownership of the Improvements is sold or transferred, Lessee or new owner will notify NTMWD of the action prior to finalization. The new owner must apply for a new Shoreline Lease and Use Agreement within thirty (30) days or remove the Improvements and restore the Leased Property within sixty (60) days from the date of ownership transfer. The new owner is responsible for paying any recording or processing fees.

25. **RECORD OF AGREEMENT FILED IN OFFICIAL PUBLIC RECORDS.** NTMWD will file a record of this Agreement, referred to as the "Record of Agreement," with the Fannin County Clerk in the Fannin County Official Public Records.

DRAFT

26. **FLOATS AND FLOTATION MATERIALS.** Floats and the flotation material for all docks shall be fabricated of materials manufactured for marine use and in accordance with the approved plans in Exhibit X. The float and its flotation material shall be one hundred (100) percent warranted for a minimum of eight (8) years against sinking, becoming waterlogged, cracking, peeling, fragmenting, or losing beads. All floats shall resist puncture and penetration and shall not be subject to damage by animals under normal conditions for the area. All floats and the flotation material used in them shall be fire resistant. The use of new or recycled plastic or metal drums or non-compartmentalized air containers for encasement or floats is prohibited.

27. **ANCHORING.** The gangways to boat docks, fishing piers, or any other overwater structure shall be securely attached to the shore in accordance with the approved plans by means of moorings that do not create tripping hazards alo g the shoreline or adversely affect the natural terrain or vegetation. Anchoring to vege ion is prohibited.

28. **DREDGING.** Unless authorized in writing by a s ecial conditi n, this Agreement does not authorize lake dredging. Lake dredging requires an individu ized analysis by the United States Army Corps of Engineers ("USACE") to determine whether it must be approved by USACE. Lake dredging may be all wed for community docks, if the following conditions are met: 1) prior to dredg , the applicant must coordinate with NTMWD to obtain express written a proval for the dredging activity; 2) if approval from NTMWD is obtained, the applica t m t then ob in appropriate state or federal authorizations and/or permits, includin a US C Clean Water Act Section 404 permit, if required; 3) once any required state or de al authorizations and/or permits are obtained, the applicant must comple e the NTMWD agreement process by providing NTMWD with copies of any such re uired aut orization and/or permits; and 4) Lessee must provide NTMWD with notifi tion of e dredging activity that includes the estimated start date and end date for the redging activity and a description of the specifications and construction m h ds to be mployed during the dredging activity.

29. **IMPROVEMENT ST NDARDS.** Docks and other permitted improvements must conform t the standard found in the SMP and Exhibit X. These standards address electrical ser ice and l ghting, signage, improvement size and length, improvement location and sp ing orientation of the improvement to the shoreline, improvement maintenance, and ther features and amenities as described in the SMP. Any deviation from the SMP requirements will be considered a violation of this Agreement.

30. **PERSONAL PROPERTY.** Loose personal property that has the ability to float must be stored in a secure locker or removed from the Leased Property when not in use.

31. **AGREEMENT DISPLAY TAG.** The Agreement Display Tag shall be posted on the Improvements and/or on the land areas covered by the Agreement so that it can be visually checked with ease in accordance with instructions provided by NTMWD.

32. **VEGETATION.** No vegetation other than that prescribed in this Agreement will be damaged, destroyed, or removed. In no event will vegetation be disturbed to the extent the

DRAFT

right-of-way will be subject to erosion or natural beauty destroyed. All disturbed areas shall be seeded, replanted, or given some type of equivalent protection against subsequent erosion. No change in landform such as grading, excavation or filling is authorized by this Agreement. No vegetation planting of any kind may be done, other than that specifically prescribed. Only native species are allowed. An approved native plant list is provided in the SMP.

33. **VEGETATION MODIFICATION.** When vegetation modification is approved to control or remove invasive plants and is authorized by chemical means, the modification will be in accordance with appropriate federal, state, and local laws, rules, and regulations.

34. **LAKE AND SHORELINE ACCESS PRIOR TO LAKE OPENING.** NTMWD will notify Lessee in writing when the Lake is officially open for use. Until NTMWD notifies Lessee, Lessee is not permitted to use the Lake for any p pose, including but not limited to, launching watercraft from the shoreline for recreati nal us

35. **LAKE AND SHORELINE ACCESS AFTER LAKE OPENING.** After the Lake is open, all watercraft must be launched from a NTMWD approved ramp or a dock. This excludes non-motorized watercraft such as k aks, c noes, and stand up paddle boards. Unless otherwise approved, neither Lessee nor in i idual lot owner may build a boat ramp or use any of their property to launch a watercraft ex ept as set forth herein.

36. **PROPERTY LINE AND SIDE YARD LI E DELINEATION.** For this Agreement, Lessee will delineate the boundary l ne between the NTMWD-owned property and Lessee's property in a visi ly cl r, but u obtrusive manner approved by NTMWD and in accordance with the SMP. Less e will al identify the intersection of the projected side yard line and the 534 MSL as d pi ted in the exhibits to this Agreement.

37. **PROHIBITED TEMS.** reated landscape timbers or the storage, transfer or use of hydrocarbo s or other petroch mical products, paint, pesticides, herbicides, or any other toxic or hazardous mate als are not allowed on the Leased Property.

38. **ELECTRICAL SAFETY AND COMPLIANCE.** Lessee shall comply with all applicable feder sta e, county, municipal laws, ordinances, and regulations wherein the permitted facilities/ ctivities are located, including, but not limited to, the provisions of the latest edition of the National Electrical Code (NEC). Failure to abide by these applicable laws and regulations may be cause for revocation of this Agreement.

39. **POLLUTION PREVENTION.** Within the limits of their respective legal powers, the Parties hereto shall protect the Leased Property against pollution of its air, ground, and water. Lessee shall promptly comply with any laws, regulations, conditions, or instructions affecting the activity hereby authorized if and when issued by the Environmental Protection Agency ("EPA"), USACE, Texas Commission on Environmental Quality ("TCEQ"), or any federal, state, or local governmental agency having jurisdiction to abate or prevent pollution. The disposal of any toxic or hazardous materials within the Leased Property is strictly prohibited. Such regulations, conditions, or instructions in effect or prescribed by

DRAFT

the said EPA, USACE, TCEQ, or any federal, state, or local governmental agency are hereby made a condition of this Agreement. Lessee shall not discharge waste or effluent from the Leased Property in such a manner that the discharge will contaminate streams or other bodies of water or otherwise become a public nuisance.

40. **PESTICIDES AND HERBICIDES.** The use of any pesticides or herbicides within the Leased Property shall be in conformance with all applicable federal, state, and local laws and regulations. Lessee must obtain approval in writing from NTMWD before any pesticides or herbicides are applied to the Leased Property.

41. **ENVIRONMENTAL IMPACT.** Lessee will use all reasonable means available to protect the environment and natural resources, and where damage nonetheless occurs arising from Lessee's activities, Lessee shall be liable to restore the damaged resources.

42. **TIMBER CLEARING.** No timber within the Lea d Property above the 534 MSL contour shall be cleared. Standing timber below the 534 MSL con our may be cleared only if approved through this Shoreline Lease and Use Agreement. essee shall provide documentation of coordination with USACE i accordance with the procedures described in the SMP. Such USACE coordination shall nly oc ur after NTMWD has reviewed the timber clearing proposal and provided direction to gage in such coordination. Any timber clearing authorized under this Agreement must be in ompliance with any required USACE approvals, authorizations, or permits Tim r clearing hall be approved by NTMWD in writing and shall be in accordance wit the C a Water Act Section 404 Permit for Bois d'Arc Lake as provided in the SMP. Timbe clearing not approved by NTMWD in writing is prohibited.

43. **CULTURAL RESOURCES** es ee shall not remove or disturb, or cause or permit to be removed or disturbed, ny historical, archaeological, architectural, or other cultural artifacts, relics ains, or bjects of antiquity on NTMWD-owned property. In the event such items are disco red on the NTMWD-owned property, Lessee shall immediately notify NTMWD and pro ect the site and material from further disturbance until NTMWD authorizes ny further ac vity.

44. **TERMINATION OF AGREEMENT.** Because the cost of the Improvements was made with the expectatio that Lessee would have the benefit of the Leased Property for the full term of this Agreement, Lessee may only be terminated if the matters noticed in Exhibit X under the Violations and Penalty Provisions of this Agreement have not been cured in accordance with such provisions.

45. **IMPROVEMENT REMOVAL.** On or before the expiration or termination of this Agreement or if Lessee ceases to use, operate, or maintain an Improvement and/or use, Lessee shall, without expense to NTMWD, remove said Improvements and restore the waterway and lands to the satisfaction of NTMWD within thirty (30) days. In the event Lessee shall fail to remove said Improvements and restore the Leased Property, NTMWD shall have the option to take over said Improvements without compensation, or to remove said Improvements and perform the restoration at the expense of Lessee, and Lessee shall

DRAFT

have no claim for damages against NTMWD or its officers or agents for such action and no refund by NTMWD of any fee theretofore paid shall be made. Lessee agrees that if subsequent operations by NTMWD require an alteration in the location of an Improvement and/or use and if in the opinion of NTMWD an Improvement and/or use shall cause unreasonable obstruction to NTMWD use of the land or water area where the Improvement or use is located, Lessee shall be required, upon written notice from NTMWD, to remove, alter, or relocate the Improvement without expense to NTMWD.

46. **OTHER PERMITS REQUIRED.** This Agreement is effective only insofar as the rights of NTMWD in the Leased Property and Easement are concerned, and Lessee shall obtain such permission as may be required on account of any other existing rights. It is understood that the granting of this Agreement does not eliminate the necessity of obtaining any other permit or license that may be required by federal, state, or local statute in connection with use of the Leased Property, including, but not limited to, any permits or authorization from USACE to ensure compliance with the Clean Water Act.

47. **SANITATION.** Lessee shall take all necessary action and provide all necessary Improvements to maintain the Leased Property in a clean and sanitary manner, removing promptly and regularly trash and garbage from the said area. Any materials and refuse from construction, maintenance and repair activities are to be removed from the Leased Property immediately upon completion of such activities.

48. **LICENSED PROFESSIONAL ENGINEER REQUIRED.** NTMWD may require that remedial measures other than minor repairs and maintenance, and plans for same, be reviewed, designed, and sealed by a Texas Licensed Professional Engineer and approved by NTMWD.

49. **FINAL PLAT MAPS.** In the event final plat maps were not provided by Developer to NTMWD prior to the Effective Date, Lessee shall be required to provide NTMWD with all final plat maps and specifications within thirty (30) days of such maps and specifications being finalized.

50. **SEVERABILITY.** In case any one or more of the provisions contained in this Agreement shall for any reason be held to be invalid, illegal, or unenforceable in any respect, such invalidity, illegality, or unenforceability shall not affect any other provision thereof and this Agreement shall be considered as if such invalid, illegal, or unenforceable provision had never been contained in this Agreement.

51. **NO JOINT VENTURE.** It is acknowledged and agreed by the Parties that the terms hereof are not intended to and shall not be deemed to create any partnership or joint venture among the Parties. NTMWD, its past, present, and future officers, elected officials, employees and agents of NTMWD, do not assume any responsibilities or liabilities to any third party in connection with the improvements to, or use of, the Leased Property.

52. **REPRESENTATIONS AND WARRANTIES.** Each Party represents and warrants to the other Party that (i) the Party has full requisite power and authority to perform its obligations

DRAFT

under this Agreement; (ii) the execution, delivery, and performance of this Agreement has been duly authorized by all necessary action of the board of directors or other applicable governing body of the Party; (iii) this Agreement is a valid and binding obligation of the Party enforceable against the Party in accordance with its terms, except as the enforceability may be limited by applicable bankruptcy, insolvency or other law affecting creditors' rights generally, and by general equitable principles; and (iv) the execution, delivery, and performance of this Agreement by the Party does not, and will not: (A) violate the statute, charter, or other instrument pursuant to which the Party was created; (B) violate the Constitution of the State of Texas, or any other law, rule or regulation by which the Party is bound; (C) violate any judgment, writ, order, injunction, award, or decree of any court, arbitrator, administrative agency or other governmental authority which is binding upon the Party; or (D) result in a material breach, violation, or default under any indenture, mortgage, ordinance, bond resolution, contract, deed of tr t, debenture, agreement, or other instrument to which the Party is a party.

53. **ENTIRE AGREEMENT – NO ORAL MODIFICATIONS.** T is Agreement embodies the entire Agreement of the Parties, superse ing all oral or ritten previous and contemporary agreements between the Par es relating to matters set forth in this Agreement. Except as otherwise provided els where n this Agreement, this Agreement cannot be modified without a written agreement cuted by both Parties.

54. **NO THIRD PARTY BENEFICIARIES.** Lessee and NTMWD enter into this Agreement solely for the benefit of themselves nd agr e t nothing in this Agreement shall be construed to confer any right privilege r b nefit on any person or entity other than Lessee and NTMWD.

55. **VENUE.** It is specifi ally agre d mong the Parties to this Agreement that Fannin County, Texas, is the place of p rf mance of this Agreement; and, in the event that any legal proceeding is b ht to en rce this Agreement or any provision hereof, the same shall be brought in Fannin Co ty, Te as.

56. **ADOPTION OF PREAMBLE AND EXHIBITS.** All of the statements in the preamble and all of the xhibits o this Agreement are true and correct and are hereby incorporated into the body of is Agreement as though fully set forth in their entirety herein.

**SPECIAL CONDITIONS** ***(To be completed for each project)***

**VIOLATIONS AND PENALTIES**

1. Lessees will be held accountable to the conditions outlined herein. If a violation is identified, NTMWD will follow the steps outlined below:

   *First Notice:* NTMWD will generally issue a written warning notifying Lessee of the violation, outlining actions to correct the violation, and providing a resolution timeframe. Depending on the non-compliance issue (e.g. is the issue an imminent health or safety concern), the time provided for resolution and the degree to which NTMWD may step in and proactively correct an issue may vary. Some violations may immediately generate a fine. NTMWD may, at its discretion, waive fines to be imposed at the first notice. NTMWD

DRAFT

will follow up within the specified timeframe to document resolution of the issue. Increased frequency of monitoring and inspection may be warranted for a period of time following resolution.

*Second Notice:* A second notice may involve the same activity or conditions as the first notice, or it may be a new issue. Second notices for the same situation that triggered the first notice will also be linked to increased fines and shorter resolution timeframes. Lessees will be required to reimburse NTMWD for costs associated with monitoring, inspection, and follow-up for second notice actions.

*Third Notice:* Three notices for the same or different instances of non-compliance with this Agreement within one year will trigger a notice to revoke or terminate this Agreement. Lessee will have thirty (30) days to remove Improvements at his or her expense and restore the Leased Property to its condition prior to the constr ion of the Improvements (if applicable). Lessee may appeal a notice of termination t NTMWD within fifteen (15) days of receiving the notice. NTMWD will respond to L ssee within t irty (30) days.

2. Resolution timeframes and fines are depend nt on the harm that may occur to people, property, and resources if the violation were to ontin e. Violations that are hazardous, or potentially hazardous, generally have shorter res ution timeframes and higher penalties than administrative violations. **Exhi it X** outlines r solution timeframes, remedies, and penalties for various violations.

**EFFECTIVE DATE AND TERM**
This Agreement becomes effe ive on th date thi Agreement is signed by both Parties (the "Effective Date") and will b valid for ve years after the date of the latest signature. This Agreement will expire on _____.

**AUTHORIZATION**
This Agreement authorizes the ease and use of NTMWD-owned property described herein. If Lessee implemen a project tha differs from the Project described herein, Lessee will be subject to penalties and fines described n this Agreement, and potentially termination.

**EXECUTION**
The Parties hereto acting under authority of their respective governing bodies have caused this Agreement to be duly executed in several counterparts, each of which shall constitute an original.

*[The remainder of this page is intentionally left blank. Signatures are on the following pages.]*

DRAFT

**LESSEE: XXXXXXXX**

By: _____ _____
INSERT NAME, TITLE Date

STATE OF TEXAS §
§
COUNTY OF INSERT §

This instrument was acknowledged before me on this _____ day of _____, 202__, by INSERT NAME, TITLE of LESSE.

_____
Notary Public, State of Texas
Printed Name of Notary:

_____
My Commission Expires: _____ _____

**LESSEE: ASSOCIATION**

By: _____ _____
INSERT NAME, TITLE Date

STATE OF TEXAS §
§
COUNTY OF INSE T §

This instrument w acknowledged before me on this _____ day of _____, 202__, by INSERT NAME, TITLE of LESSE.

_____
Notary Public, State of Texas
Printed Name of Notary:

_____
My Commission Expires: _____

DRAFT

**NORTH TEXAS MUNICIPAL WATER DISTRICT**

By: _____ _____
INSERT NAME, TITLE Date

STATE OF TEXAS §
§
COUNTY OF COLLIN §

This instrument was acknowledged before me on this _____ day of _____, 202__, by INSERT NAME, TITLE of North Texas Municipal Wat District, a conservation and reclamation district and political subdivision of the State of T xas, on ehalf of said conservation and reclamation district.

_____
Notary Public, State of Texas
Printed Name of Notary:

_____
My Commission Expires: _____

DRAFT

EXHIBIT C

Agreement Fees and Remedies and Penalties for Violations

DRAFT

# Agreement Fee Schedule

| Agreement Type | Activity/Facility | Application Fee ($) | Annual Fee | Incentives/Additional Information |
|---|---|---|---|---|
| Preliminary Development Agreement | Community and Shared Dock/Overwater Structures | Application/ First Year: $75,720 | For years 2 through 5 of a 5-year agreement: $7,800 | All shoreline use activities/facilities will be combined on one permit. Only the higher fee identified will be assessed.<br><br>If erosion control or stormwater runoff treatment BMPs are provided supplementary to any required erosion control; an incentive reduction of 50 per ent of the annual fee may be plied. |
| Preliminary Development Agreement | Modification fee | 25-100 percent of the original application fee | N/A | |

DRAFT

# Remedies and Penalties for Violations

| Violation[1] | Violation Category[2] | Remedy[2] | Resolution Timeframe (days) *First Notice*[2] | Resolution Timeframe (days) *Second Notice*[2] | Fine ($) *First Notice*[2] | Fine ($) *Second and Third Notices*[2] |
|---|---|---|---|---|---|---|
| Unauthorized burning | Major | Immediately stop unauthorized burning and remove debris from NTMWD-owned property | 1 | N A | $200 | N/A |
| Storage or placement of fuel, oil, treated landscape timbers, pesticides, or other hazardous materials on docks or NTMWD-owned property | Major | Remove hazardous materials from NTMWD-owned property and st in secure location on priv e operty | 5 | 1 | N/A | $200 |
| Unauthorized use of pesticides/fertilizers on leased property | Ma | S p unau orized use of pesticides and report changes in water quality (e.g., algal blooms and/or dead fish) to NTMWD | 1 | N/A | $200 | N/A |

DRAFT

| Violation[1] | Violation Category[2] | Remedy[2] | Resolution Timeframe (days) *First Notice*[2] | Resolution Timeframe (days) *Second Notice*[2] | Fine ($) *First Notice*[2] | Fine ($) *Second and Third Notices*[2] |
|---|---|---|---|---|---|---|
| Unauthorized placement or storage of personal property on NTMWD-owned property and/or water | Major | Remove personal property from NTMWD-owned property and store in a secure location on private property | 5 | 1 | N/A | $200 |
| Unauthorized use of private overwater facility (e.g., human habitation on boat dock, storing nonauthorized vessels or watercraft at an approved boat dock, subletting boat dock) | Major | Stop unauthorized use and restore facility to post-violation conditions (e.g., remove e nce of human habita on from o d ck) | 5 | 3 | 200 | $200 |
| Unauthorized dock structure or dock modification | Major | S p cons uction (if applicable) and restore facility to pre-violation conditions | 15 | 3 | 200 | $200 |
| Unauthorized vegetation modification (e.g., removing vegetation outside of an authorized area, changing landform, planting unauthorized plants) | Major | Stop violation and restore to pre-violation conditions (e.g., replant with authorized native plant species) | 30 | 5 | 200 | $200 |

DRAFT

| Violation[1] | Violation Category[2] | Remedy[2] | Resolution Timeframe (days) *First Notice*[2] | Resolution Timeframe (days) *Second Notice*[2] | Fine ($) *First Notice*[2] | Fine ($) *Second and Third Notices*[2] |
|---|---|---|---|---|---|---|
| Deviation from approved dock construction plans (e.g., construction materials, anchoring methods, etc.) | Major | Reconstruct dock to conform to approved construction plans | 30 | 5 | N/A | $200 |
| Unauthorized access path construction | Major | Stop construction and restore area to pre-violation conditions | 15 | 5 | 200 | $200 |
| Emerging erosion issues (signs may include shoreline recession, increased water turbidity and discoloration in the surrounding area, bare soil, exposed plant roots, and unstable banks) | Major | Stop erosio producing activity and install erosion ontr device and/ plant na ve getation | 30 | 5 | 200 | $200 |
| Unauthorized use of a mobility assistance vehicle | M jor | Stop unauthorized use, restore area to pre-violation conditions (if applicable) | 15 | 3 | N/A | $200 |
| Failure to delineate the NTMWD boundary line | Moderate | Delineate and mark the NTMWD boundary line using methods approved in the Shoreline Management Plan | 15 | 10 | N/A | $200 |

DRAFT

| Violation[1] | Violation Category[2] | Remedy[2] | Resolution Timeframe (days) *First Notice*[2] | Resolution Timeframe (days) *Second Notice*[2] | Fine ($) *First Notice*[2] | Fine ($) *Second and Third Notices*[2] |
|---|---|---|---|---|---|---|
| Failure to restore the leased area after completion of a permitted activity or after the lessee damages the area | Moderate | Restore area to pre-lease conditions (e.g., restore vegetation, install erosion control measures such as water bars and vegetated swales) | 30 | 15 | N/A | $85/day |
| Failure of POA or developer to apply for shoreline use agreement for existing uses within 30 days or to restore the use area within 60 days from the date of ownership transfer | Moderate | Apply for a new shorel e lease and us agreement or esto the use ar | 30 | 15 | N/A | $85/day |
| Failure to display agreement tags on authorized facilities | M or | Disp y agreement tags according to agreement conditions and Shoreline Management Plan requirements | 30 | 15 | N/A | $150/week |
| Failure to have a copy of the agreement with the mobility assistance vehicle during use on NTMWD-owned property | Minor | Carry agreement according to authorization conditions | 1 | 1 | N/A | $150 |

DRAFT

| Violation[1] | Violation Category[2] | Remedy[2] | Resolution Timeframe (days) *First Notice*[2] | Resolution Timeframe (days) *Second Notice*[2] | Fine ($) *First Notice*[2] | Fine ($) *Second and Third Notices*[2] |
|---|---|---|---|---|---|---|
| Failure to pay agreement fees | Minor | Pay outstanding agreement fee | 30 | 15 | N/A | $150/week |
| Failure to renew an agreement | Minor | Apply for a new agreement and pay associated application fees | 30 | 1 | N/A | $150/week |
| Failure to complete construction within allowed time limit | Minor | Apply for new agreement and pay associated application fees | 0 | 15 | N/A | $150/week |
| Noncompliance with applicable laws, ordinances, and regulations | NA | NTMWD reports vi ions to the appro iate auth rity nforcement | Depends on law/ egulation | Depends on law/ regulation | Depends on law/ regulation | Depends on law/ regulation |

[1]Penalties may be assess in dually fo discrete facilities and occurrences

[2]NTMWD = North Te s Municipal W er Distr ; N/A = not applicable; SMP = Shoreline Management Plan

DRAFT